FLOWBIRD
Urban
Intelligence

CWT Compact S3 Installation & Maintenance Manual

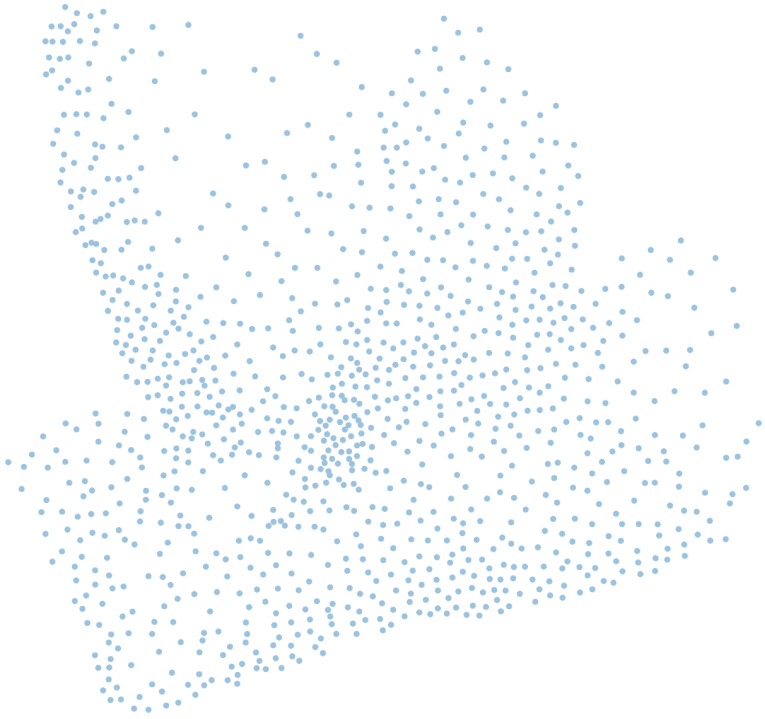

CWT Compact S3 Installation & Maintenance Manual
Issue 13,
Published: 2021-07-28.

© 2021 Cale Access AB. All rights reserved. Flowbird reserves all proprietary rights relating to the contents of this document. Flowbird reserves all rights over usage, reproduction, representation, marketing, translation, adaptation or modification, and generally all rights over present and future utilisation by any means, for any purpose and in any territory, throughout the period of protection. All use of the contents of this document requires the prior written permission of Flowbird. Flowbird reserves the right to change data, drawings and descriptions without prior notice. Certain characteristics may vary according to customer requirements and do not represent a commitment by Flowbird.

Flowbird

Headoffice	100 avenue de Suffren, 75015 Paris - France
Sweden office	Box 1031 164 21 KISTA, Sweden
Website:	www.flowbird.group
Support	https://flowbird.force.com

Table of content

1. Aprovals 7
2. Introduction 7
2.1 About this Manual 7
2.2 List of major changes 8
2.3 Target audience 8
2.4 Structure of this book 8
2.5 References 8
2.6 Terminology 9
3. Safety 10
3.1 High voltage 11
3.2 Batteries 11
3.2.1 Back-Up battery holder on CPU board 11
3.2.2 Short-circuit risk 12
3.2.3 Caustic acid 12
3.2.4 Risk of explosion 13
3.2.5 Disposal 13
3.3 LCD display 13
3.4 Heavy lifting 14
3.5 Risk of tipping 14
3.6 ESD protection 14
4. Product description 15
4.1 Means of payment 15
4.1.1 Coin system 17
4.1.1.1 Anti-pin module 17
4.1.1.2 Coin verifier 20
4.1.1.3 Escrow 22
4.1.1.4 Coin handling board 24
4.1.1.5 Coin box 25
4.2 Graphical STN & TFT displays 26
4.3 Data communication 28
4.4 Print system 28
4.4.1 Zebra printer 29
4.4.1.1 Print head 30
4.4.1.2 Sensors 30
4.4.1.3 Feed button 31
4.4.1.4 Status indicator 32
4.4.1.5 Power indicator 33
4.4.1.6 Printer mounting 33
4.4.1.7 Paper supply 34
4.4.2 GeBe GTP4672 Thermal printer 34

4.4.2.1 Sensors 36
4.4.2.2 Printer mounting 37
4.4.2.3 Paper supply 40
4.4.3 Preprinting on printer media 40
4.4.4 Black mark location 41
4.5 The service menu 42
4.6 Mechanical design 43
4.6.1 General 43
4.6.2 Product label 43
4.6.3 Inside the pedestal 44
4.6.3.1 COIN BOX Vault 45
4.6.4 Door locks 46
4.6.4.1 Mechanical locks 46
4.6.4.2 Electronic locks 46
4.6.4.3 Door-open sensors 49
4.6.5 Heating system 50
4.7 Power supply 50
4.7.1 Power control 50
4.7.2 Battery charging by solar power 51
4.7.3 Battery charging by mains power 52
4.8 Administrative tools 52
4.9 CWT Compact interconnections 53
4.10 CPU board version 0501-E0150 Rev I 53
4.11 Terminal measurements 57

5. Installation 58
5.1 Site preparations 58
5.1.1 Minimal site dimensions & Mounting holes 58
5.1.2 Solar power positioning 59
5.1.3 Placing the terminal on an existing concrete foundation 60
5.1.4 Pouring a new concrete foundation 60
5.1.5 Power supply 62
5.2 Installing the terminal 62
5.2.1 Mounting the pedestal in its foundation 62
5.2.2 Mounting the cabinet on top of the pedestal 63
5.2.3 Installing the battery 63
5.2.4 Connecting to the mains power grid 64
5.2.5 Installing a modem 65
5.2.5.1 Checking modem contact with network provider 67
5.2.6 Loading paper in a GeBe printer 67
5.2.7 Installing the coin box 69
5.3 Program loading 69
5.4 Changing the settings of the terminal 70

6. Daily operation 70

6.1 Changing and emptying the coin box 70
6.2 Paper refill 71

7. Preventive maintenance 71
7.1 Batteries 72
7.2 Zebra printer 74
7.2.1 Cleaning 74
7.2.2 Testing 75
7.3 GeBe Printer GTP4672 75
7.3.1 Print head 75
7.3.2 Cleaning 78
7.3.3 Testing 79
7.4 Coin handling unit 79
7.5 Card readers 80
7.5.1 Chip-card reader 80
7.5.2 Hybrid card reader 80
7.6 Display module 80
7.7 Cabinet door display window 81
7.8 Cabinet 81
7.9 Solar panel 82

8. Corrective maintenance 82
8.1 Lead battery replacement 83
8.2 CPU board lithium cell replacement 83
8.3 Printer replacement 83
8.3.1 Zebra printer 83
8.3.1.1 PRINT HEAD, CLEANING 84
8.3.1.2 PRINTER PLATEN AND FEED ROLLERS, CLEANING 84
8.3.1.3 PAPER JAM CLEARING 84
8.3.1.4 FRONT PRESSURE ROLLERS REPLACEMENT 84
8.3.1.5 REAR PRESSURE ROLLERS REPLACEMENT 84
8.3.1.6 PRESENTER TABLE REPLACEMENT 85
8.3.1.7 CUTTING BLADE REPLACEMENT 85
8.3.1.8 PRINT HEAD REPLACEMENT 86
8.3.1.9 PLATEN REPLACEMENT 87
8.3.1.10 FEED ROLLERS REPLACEMENT 88
8.3.2 Gebe GTP4672 89
8.4 Coin unit replacement 89
8.5 Coin verifier replacement 91
8.6 Card reader replacement 91
8.7 Display module replacement 91
8.7.1 Removal of the display Unit 92
8.7.2 Assembly of the display unit 93
8.7.3 Connecting the display to the CPU board 94

8.8 Cabinet & pedestal 94
8.8.1 Cabinet & pedestal door replacement 95
8.8.2 E-lock replacement 96
9. Changing the CWT Compact software and firmware 98
Keyword Index 99

1 Aprovals

PCI Data Security Standard (PCI DSS), Level 1.

A set of comprehensive requirements for enhancing payment account data security. Developed by the founding payment brands of the PCI Security Standards Council, including American Express, Discover Financial Services, JCB International, MasterCard Worldwide and Visa Inc. Inc. International, to help facilitate the broad adoption of consistent data security measures on a global basis. This is a multifaceted security standard that includes requirements for security management, policies, procedures, network architecture, software design and other critical protective measures. This comprehensive standard is intended to help organizations proactively protect customer account data.

EN 12414 - Vehicle parking control equipment – Pay and display ticket machines – Technical and functional requirements.

Flowbird has the IP 33 approved

EN 14450 - Secure storage units. Requirements, classification and methods of test for resistance to burglary.

Secure safe cabinets. The CWT Compact is tested according to this standard with very good result, but a pay and display terminal cannot be certified to this standard due to the requirements of the standard. Test documentation is available from Flowbird.

FCC part 15 (2006) Subpart B, class B

ADA, DDA and Article 11

CE

2 Introduction

2.1 About this Manual

This Manual describe the Installation and Maintenance of your CWT Compact terminal, model S3.

All available functions are described in the manual without specifically mentioning which functions are implemented as standard and which of them that is optional. Some of the figures show optional items.

2.2 List of major changes

Area	Page	Change	Issue
Redesign of the complete document			12
Update for Flowbird contact details			13

2.3 Target audience

This manual is intended primarily for personnel who plan and carry out the installation and maintenance of the CWT Compact terminals in the field.

This document is focused on the CWT Compact .

2.4 Structure of this book

The structure of this document is outlined below.

- Introduction 7 introduces this document itself, as well as to WebOffice in terms of a system overview and general functions.
- Safety 10 describes the risks when working with the terminal
- Product presentation 15 describes the product and its use
- Installation 58 describes how to best install the terminal
- Operation 70 describes how to operate the terminal on a daily base
- Preventive maintenance 71 describes the maintenance you can do to keep the terminal working fault free
- Corrective Maintenance 82 describes how to fix problems.
- changing the CWT Compact software and firmware 98 describe the process of upgrading the terminal to the latest software

2.5 References

1. CWT Software Configuration Handbook (0400-T0232). This document also describes the service menu AVR and program updating procedures, information that may be required during installation and maintenance.
2. Exploded view drawings for each model
3. CWT User Interface Design Handbook
4. CWT 104 & Compact Installation & Maintenance
5. User guide CCC
6. CWTC OS Update for CPU board version 0501-E0150.docx
7. Mounting of Top Hat

2.6 Terminology

Term	Meaning
AVR	The AVR is an 8-bit RISC single chip micro controller. The AVR uses on-chip flash memory for program storage. See more about AVR updates in the CWT Software Configuration Handbook.
WebOffice	an internet based back office system from Flowbird
CWT	Common term for all Cale WebTerminal models (CWT 2110, CWT 2115, CWT 2120, CWT Compact Classic, CWT 104, CWT 104 S, CWT Compact all models).
	A CWT Compact terminal with a
ESD	Electro Static Discharge
Firmware	Firmware is a computer program that is embedded in a hardware device, for example a micro controller. Firmware is somewhere between hardware and software. Like software, it is a computer program which is executed by a computer. But it is also an intimate and vital part of a piece of hardware and has little meaning outside of that particular hardware.
GPRS	General Packet Radio Service is a mobile data service available to users of GSM (see below) based mobile phones and modems. GPRS is packet-switched meaning that multiple users share the same transmission channel, only transmitting when they have data to send. Thus, the total available bandwidth can be immediately dedicated to users who are actually sending at any given moment, providing higher utilization where users only send or receive data intermittently. Usually, GPRS data are billed per kilobytes of information transferred.
GSM	The Global System for Mobile communications is the most popular standard for mobile phones in the world. It includes packet data capabilities by means of GPRS (see above).
LAN	Local Area Network
Magstripe	Short for Magnetic stripe
PCB	Printed Circuit Board – A thin board with electrical wires "printed" onto the board, connecting the central processor to other components on the board. Some examples of PCBs include motherboards, RAM chips, and network interface cards.
RFID	Radio Frequency Identification – An automatic identification method, relying on storing and remotely retrieving data using devices called RFID tags or transponders. An RFID tag is an object that can be applied to or incorporated into a

	product, animal, or person for the purpose of identification using radio waves. Most RFID tags contain at least two parts. One is an integrated circuit for storing and processing information, modulating and demodulating an RF signal. The second is an antenna for receiving and transmitting the signal.
Residual-current device (RCD)	Also known as a ground fault circuit interrupter (GFCI), ground fault interrupter (GFI) or an appliance leakage current interrupter (ALCI). In Australia, they are sometimes known as "safety switches". The device disconnects a circuit whenever it detects that the electric current is not balanced between the live and the neutral conductors. Such an imbalance is sometimes caused by current leakage through the body of a person who is grounded and accidentally touching the energized part of the circuit.
TFT	TFT-LCD (Thin Film Transistor-Liquid Crystal Display) is a variant of Liquid Crystal Display (LCD) which uses Thin-Film Transistor (TFT) technology to improve image quality. TFT LCD is one type of active matrix LCD, though it is usually synonymous with LCD.
Wi-Fi	Short for Wireless Fidelity, a wireless technology brand owned by the Wi-Fi Alliance intended to improve the interoperability of wireless local area network products based on the IEEE 802.11 standards.

3 Safety

This manual uses the labels listed below to indicate specific type of risks that you will encounter during certain procedures:

Danger:
Danger means that an accident may occur if the safety precautions are not followed. This type of accident is likely to be fatal to human beings.

Warning:
Warning means that an accident may occur if the safety precautions are not followed. This type of accident may be fatal or cause severe injuries to human beings or may create essential damage to the product.

Caution:
an accident could occur if safety instructions are not followed. This type of accident may cause injury to people or may create damage to the product.

Caution:
ESD-sensitive component. Follow procedures for ESD protection. See section *ESD protection* 14.

3.1 High voltage

Danger:
Contact with live components of equipment powered by high-voltage current can be life-threatening. Also, bear in mind that moist components may conduct electricity although they possess insulating properties when dry.

Some parts inside the pedestal and in the heating system inside the cabinet are live with hazardous voltage even when the terminal is switched OFF.

Before working on components that conduct high-voltage electricity:

Turn OFF the power supply. Unscrew or switch OFF the fuse if there is one.

Make sure that the equipment is not exposed to moisture while you are working.

Follow all applicable local worker safety regulations.

3.2 Batteries

3.2.1 Back-Up battery holder on CPU board

The CPU board contains a lithium battery (button cell CR2032, 3 V, 210 mAh, 20 mm diameter) to keep the terminal's memory alive on power down.

Caution:
It is very important that the battery is of an approved brand (Duracell, Eveready, Panasonic, Ray-O-Vac, Sanyo, Varta, Toshiba, Seiko or another major battery manufacturer).

The battery must be replaced at least every 5 years. See Batteries 72 for a description how best to replace the battery.

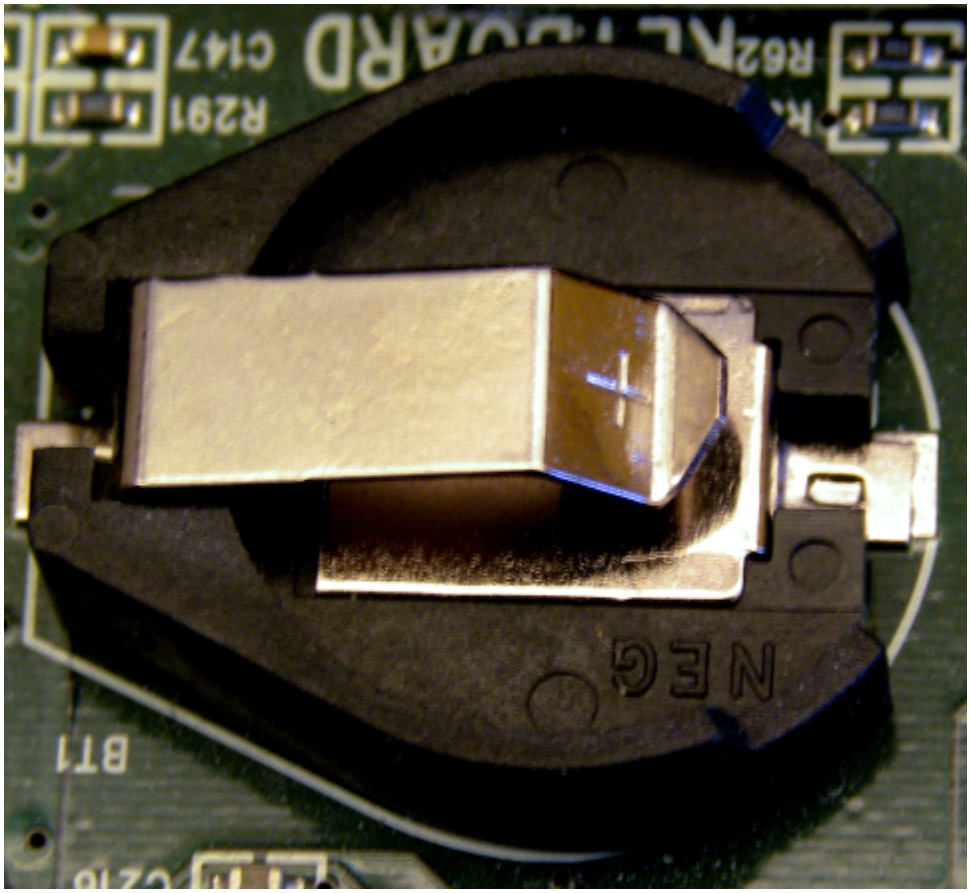

Figure 1, Backup Battery case

3.2.2 Short-circuit risk

Warning:
Although the battery voltage is relatively low, there is a risk of personal injury (such as burns) if the battery poles are short-circuited. Make sure you do not short-circuit the battery when using tools and other metal objects.

When working with equipment connected to the power supply:

- Remove rings, necklaces, watches, key rings with chains, etc.
- Always use insulated tools.
- Follow all applicable local worker safety regulations.

3.2.3 Caustic acid

Only batteries that are not maintenance-free need to be checked regularly.

Warning
The sulphuric acid used in lead batteries is caustic. Always wear eye protection when checking the battery acid level and refilling with water. If you get acid in your eyes, flush them immediately with water. There should possibilities for

flushing eyes available on facilities where the battery is charged. If you get acid on your skin, wash immediately with soap and water.

Handle the battery with care during transportation and installation.

Follow all applicable local worker safety regulations.

3.2.4 Risk of explosion

Warning:
Battery charging develops hydrogen gas that is highly explosive and inflammable. The charging area must therefore be well ventilated. Besides hydrogen gas, an acid fog is also developed.

An explosion may also occur within a few seconds if the battery poles are short circuited by a metal object such as a wrench and sulphuric acid will then be spread around.

Fire extinguishers must be accessible and clearly marked. You must not smoke, weld, cut, or use an open flame in the charging area. The charger must be OFF both when you connect and when you disconnect the battery.

Follow all applicable local worker safety regulations.

3.2.5 Disposal

Lead acid batteries should be disposed of according to the manufacturer's instructions.

Old batteries must be discharged according your countries policies and laws.

3.3 LCD display

Warning:
The liquid inside the CWT LCD display is a hazardous substance.

If the display panel is damaged and the liquid crystal substance leaks out, be sure not to get any in your mouth. If the substance comes into contact with your skin or clothes thoroughly and promptly wash it off using soap and water.

See Display module replacement 91 for a description how to replace the display unit.

3.4 Heavy lifting

Warning:
When lifting equipment that weighs more than 20 kg, always use a hoist, or let two or more people lift it. There is a major risk of back injury or sprain.

The weight of the terminal depends on the configuration.

Follow all applicable local worker safety regulations.

3.5 Risk of tipping

Warning:
Before the terminal is fixed with screws to the floor or ground, there is a risk that it may tip, especially if you open the doors.
The top cabinet can tip forward if it is not fixed to the pedestal.

3.6 ESD protection

What is ESD?

ESD is an abbreviation for Electro Static Discharge.

Electrical charges are build up when materials are rubbed or separated – e.g. when you walk across a carpet or get out of your car. The charge, which may be several thousand volts, can then be transferred to other objects if they get close enough.

Caution:
Handling ordinary plastic causes a charge to build up.

Most modern integrated circuits are extremely sensitive to ESD. The component either ceases functioning altogether, causing the equipment to stop working, or suffers damage that makes it extremely susceptible to further injury. This can eventually result in intermittent faults that are extremely difficult to locate.

Caution:
Never expose ESD-sensitive components to shocks of static electricity.

Avoiding ESD damage

Rule number 1: Prevent charge build-up!

Plastic packaging and other large plastic objects can transfer charges to conductive objects, which can then damage components. Except for special anti-static plastic, all plastic must be kept away from unconnected printed circuit board assemblies.

Rule number 2: If you need to work with electronic components or modules, connect yourself through a wristband to a grounded part inside the terminal.

Avoid touching connector pins/poles and components on printed circuit board assemblies.

Ensure that all components containing electronic parts are always stored in an ESD protection bag when handled outside the terminal.

Remember that the bags' insulating properties gradually wears out. **Always use a new bag**.

The following ESD protection accessories can be ordered from Flowbird.

0401-E0360	Wristband (for connection to the ticket terminal cabinet)
0040-07012	ESD bag, small (fits print head and coin verifier, etc.)
0040-07013	ESD bag, large (fits CPU board etc.)

4 Product description

The information panel above the display is fully customizable. The surface can also contain instructions or advertising elements.

4.1 Means of payment

The CWT Compact terminals support different means of payment and a number of payment applications.

Payment applications

Currently the CWT Compact offers:

1. pre-payment, that is, the user pays in advance and receives a ticket

   A special pre-payment application is Code Payment which requires that the user enters a code or number, for instance a license plate number. The user pays at the terminal using an available payment option.

2. Post-payment, that is, the user pays afterwards for the time used and receives a ticket depending on the configuration.

   The user checks in on the terminal on arrival with her credit or fleet card and checks out and pays when she leaves. All steps of this process can be followed in the WebOffice Post Payment menu. The feature is licensed.

Payment methods

The card and coin payment systems work independently of each other. Should one payment unit be out of order for some reason, the other payment unit will remain operable. A message in the display informs the customer about available payment methods.

Cards

CWT Compact terminals offer the possibility to pay with credit/debit magnetic stripe cards, smart cards (chip cards), contact less cards, and hybrid cards using various card reader configurations.

The standard card reader in CWT Compact is a hybrid reader capable of reading all track-2 ISO payment magstripe cards (common credit/debit cards) and ISO smart cards (chip cards). The reader requires manual card insertion and retraction of the card which enables the customer to remove the card if the terminal or transaction fails. It is also possible to install card reader solutions to be used with certain chip card applications, such as EMV2. The reader automatically detects if an inserted card is a magnetic card or a chip only card and the card functions are adapted accordingly.

To verify that a card is valid, the card number is evaluated according to prescribed rules before being checked against a blacklist containing non-valid card numbers.

Coins

The CWT Compact supports coin payment. The terminal uses various techniques for rejecting and disposing of foreign objects and not accepted coins. The coins used for payment are collected in a coin box that needs to be emptied or replaced on site.

Cash collection system

Flowbird provides a complete system for secure collection and transport of coins. With this system, the coins will never be displayed at any stage of the collection process. Contact Flowbird or your local Flowbird representative for more information. An alternative source of information on this matter is www.flowbird.group.

4.1.1 Coin system

The coin system consists of the coin unit in the cabinet and the vault with its coin box in the pedestal.

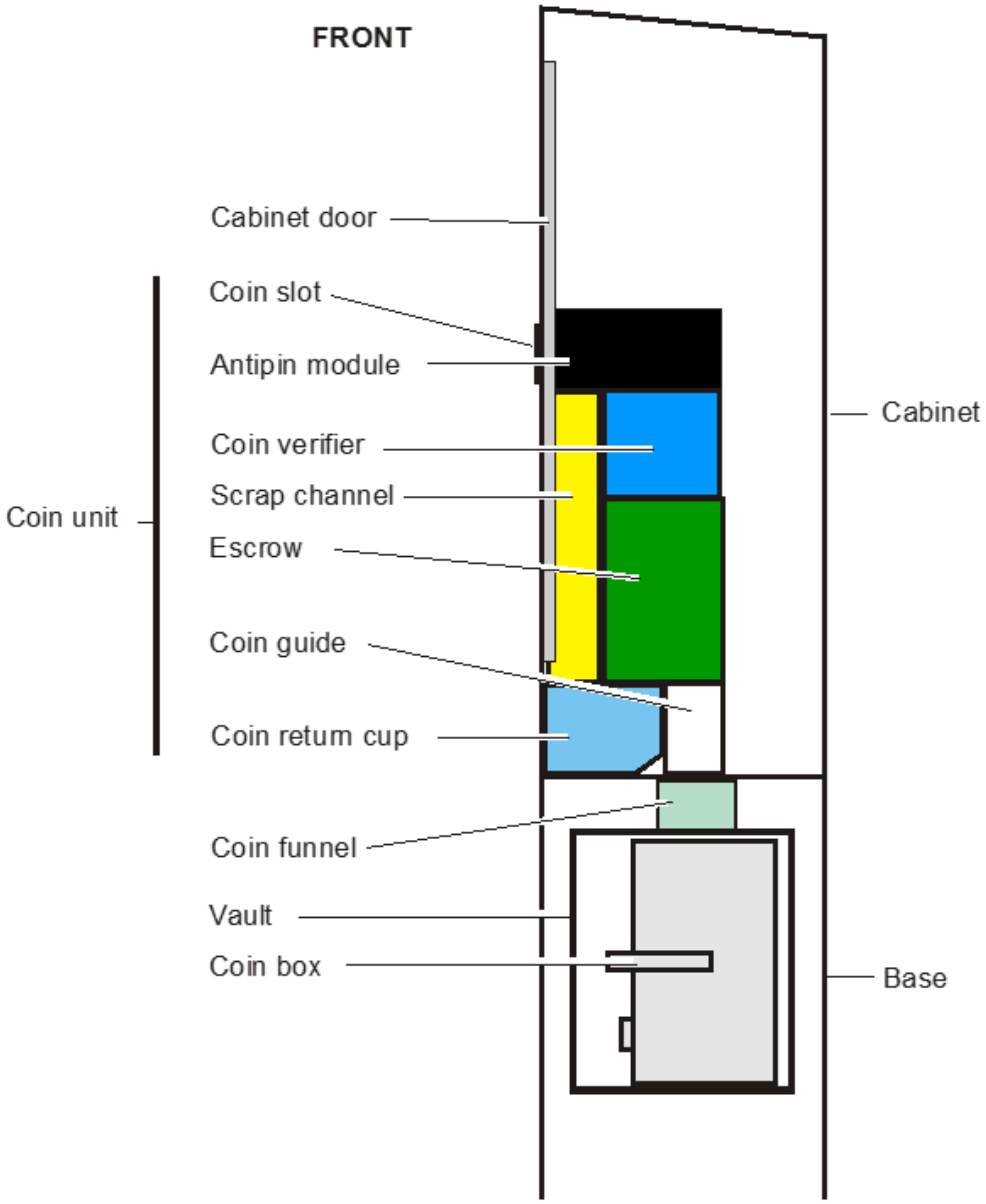

Figure 2, Logical structure of the coin system

The coin unit is designed as a module that is fitted at the back of the cabinet door by means of two key holes. The module is secured with two screws that only need to be loosened slightly when the module is to be removed.

4.1.1.1 Anti-pin module

The function of the anti-pin module is to prevent external manipulation of the coin system. The figures below illustrate the function principles of the anti-pin module. The mechanism is seen from above.

The anti-pin module has a pair of metal-detector coils just inside the coin slot opening. A bit further in there is a barrier plate that usually covers the coin slot. The barrier plate is pulled into closed position by a tension spring.

A slightly inclined trap door, operated by a solenoid plunger, is held in opened (clock-wise) position by a permanent magnet inside the solenoid across which no voltage is currently applied (the above figure shows the trap door in its closed position).

The figure below illustrates the mechanism in idle mode before any metal object is detected in the coin slot. The barrier plate is kept closed by a compression spring and the trap door is in the open position.

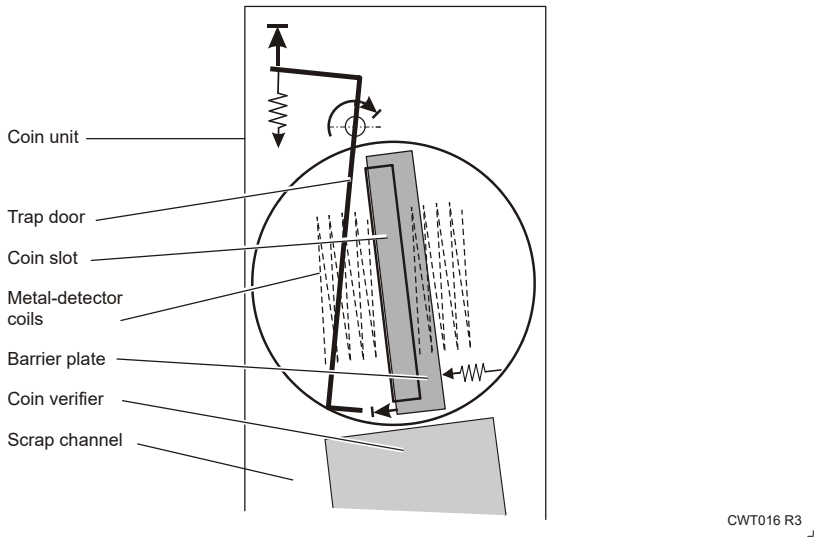

Figure 3, Anti pin in idle mode. The barrier plate covers the coin slot opening and the trap door rests in open position.

When a metal object is detected by the detector coils, a voltage is temporarily applied across a separate coil in the solenoid which generates a magnetic field that repulses the field of the permanent magnet. The trap door now rotates anti-clockwise pulled by a tension spring mounted on the solenoid plunger. The trap door also forces the barrier plate to the right to allow the metal object to be fully inserted. See figure below.

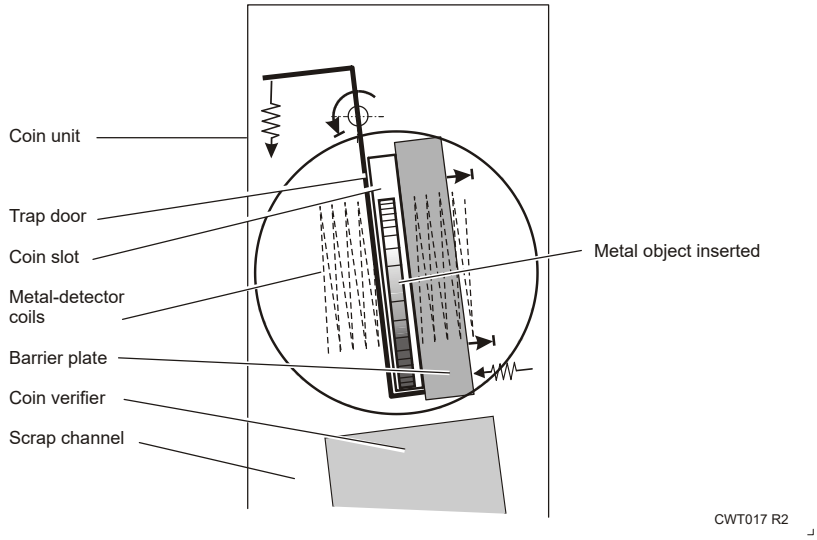

Figure 4, Barrier plate, and thus the antipin module, opens for metal objects.

The almost vertical trap door has a perpendicular shelf at its lower edge. This shelf slopes downward and rearward toward the coin verifier. A round metal object will roll along the shelf and fall into the coin verifier. A metal object that cannot roll will fall into the scrap channel as the trap door is swung clock-wise by the solenoid after a pre-set time delay.

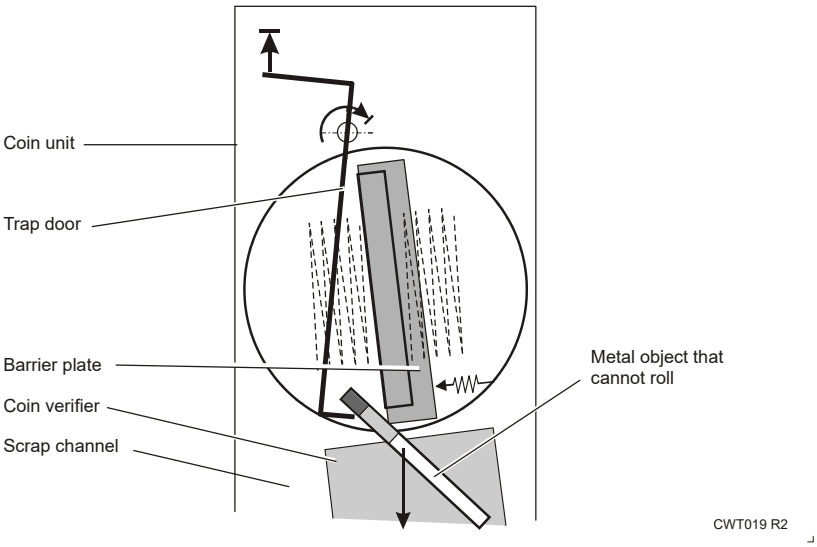

Figure 5, Non-valid metal objects are scrapped.

The permanent magnet in the solenoid module will keep the trap door in open position and thus no voltage needs to be applied to the solenoid continually which reduces the power consumption.

As the trap door opens, the compression spring will close the coin slot by pushing the barrier plate to the left.

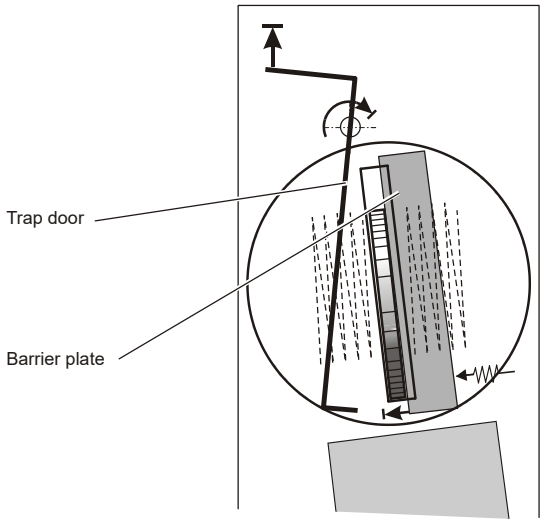

Figure 6, Metal object stuck in the coin slot.

If an object, or part of an object, remains in the coin slot opening as shown in the figure above, the barrier plate will stop against this object but will close as soon as the object is removed.

Important:
The function of the coin system may be interrupted if the terminal leans too much in any direction.

If an object, or part of an object, is inserted and prevents the trap door from closing, this will be detected. The coin system will try to remove the object, if it doesn't succeed the terminal will send an alarm to WebOffice.

4.1.1.2 Coin verifier

The coin verifier reveals if valid coins have been used. The verifier also includes sophisticated electronics for determining what type of coin is passing.

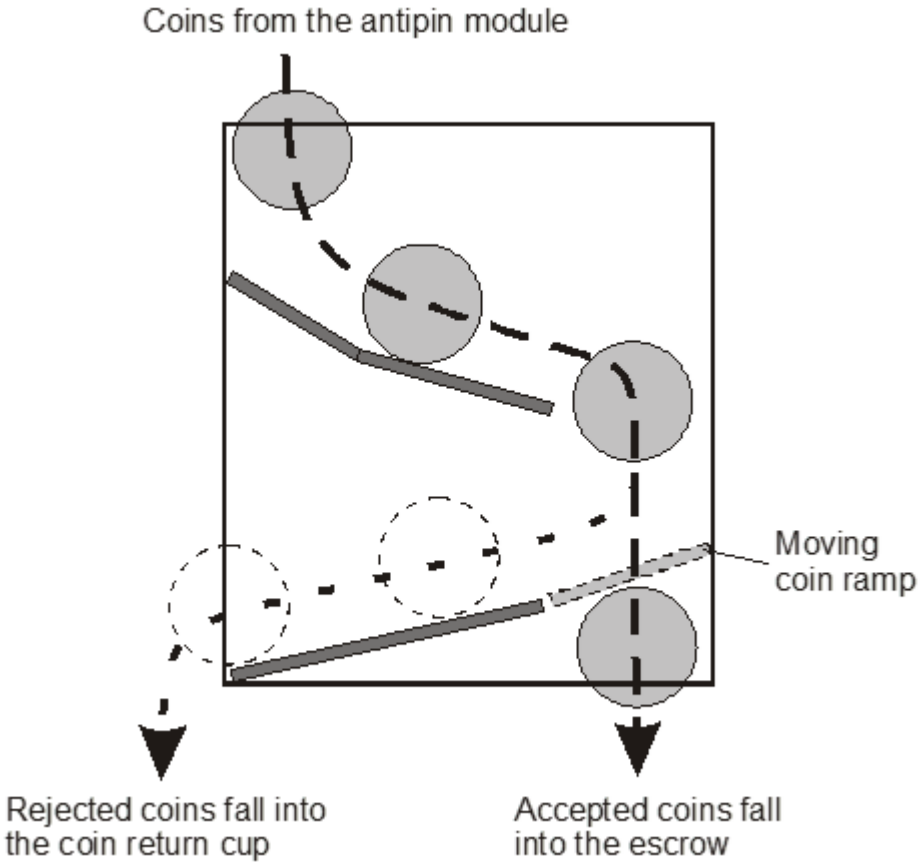

Figure 7, Coin verifier checks that a coin is valid and determines its type.

If a coin is valid, the movable coin ramp moves out of the way so the coin falls into the escrow. If the coin is invalid, the movable coin ramp guides it, via the scrap channel, into the coin return cup instead.

On the right side of the coin verifier (as seen from the front of the terminal) there is a lid.

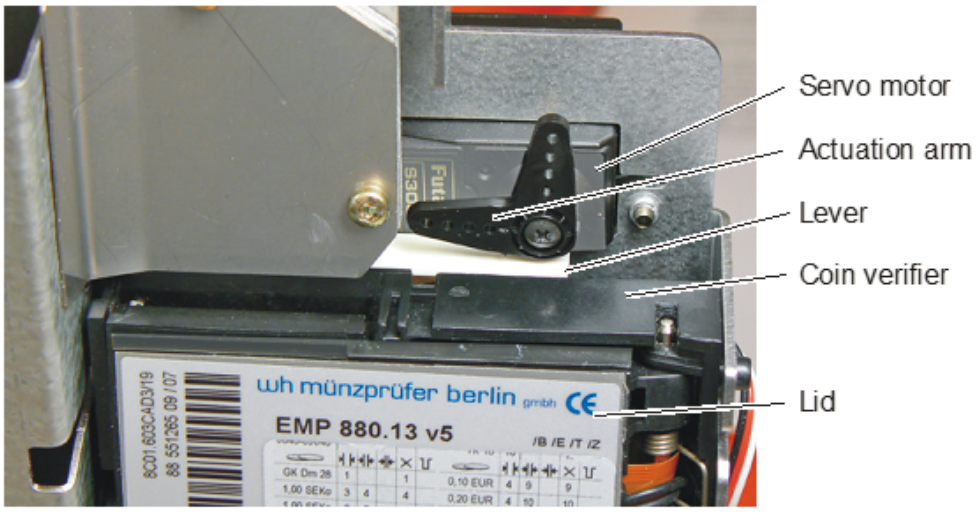

Figure 8, Coin verifier lid opening mechanism in closed position.

When you push the coin return button, a small servo motor turns an actuation arm which actuates a lever on top of the coin verifier. This lever opens the lid slightly to release objects stuck inside.

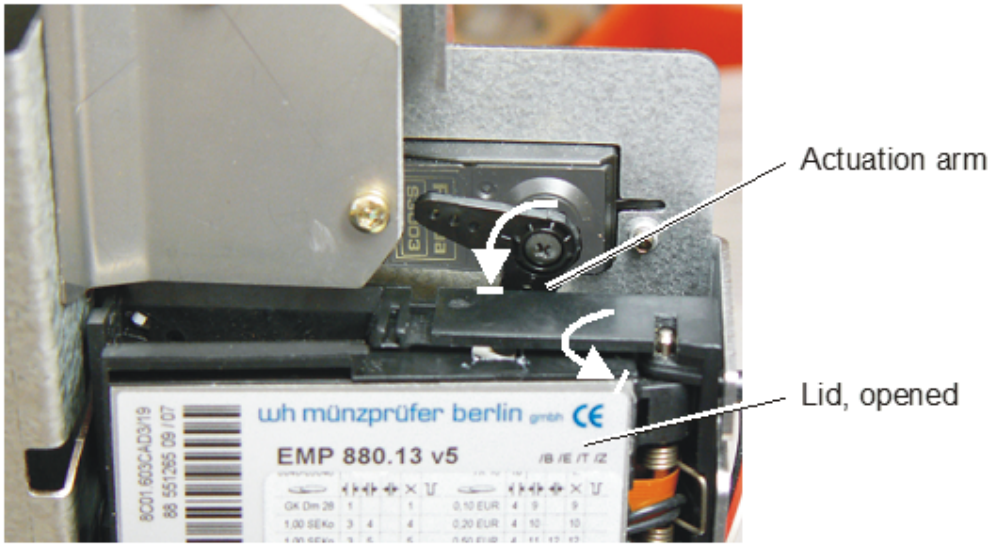

Figure 9, Coin verifier lid opening mechanism in open position.

Important:
The coin verifier can be opened manually for inspection, emptying, and cleaning.

The coin verifier is an industry standard 3.5” electronic device programmed to recognize up to 16 types of coins from optional currencies. For each coin type recognized a unique code is sent to the CPU board.

Flowbird provides pre-programmed coin verifiers for all countries where the terminals are sold, but clients can also program the modules themselves if necessary. Contact Flowbird for further information about coin verifier programming.

4.1.1.3 Escrow

The task of the escrow is to store the inserted coins until the customer accepts or cancels the purchase. Accepted coins are guided into the coin box. Cancelling the purchase empties the coins into the coin return cup. The volume of the escrow is approximately 0.35 l, equal to about 120 coins.

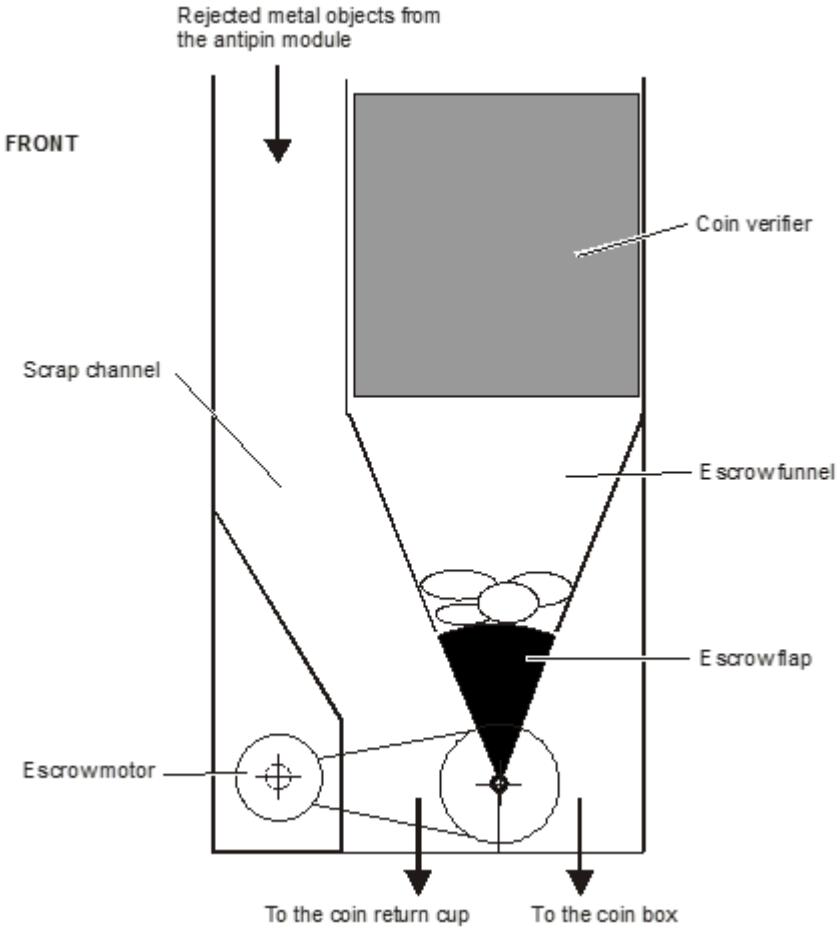

Figure 10, Escrow in home position.

The figure above shows the coin unit as seen from the terminal's right side.

To the left is the scrap channel through which any objects rejected by the anti-pin module or the coin verifier will fall into the coin return cup.

Below the coin verifier is the escrow that consist of a funnel, a flap and a DC motor (escrow motor).

The flap can be rotated to the left or right by the motor via a toothed belt and a pulley attached to the flap. The pulley has a small permanent magnet mounted close to its outer edge. There is a printed circuit board, named coin handling board, mounted on the left side of the coin system module (not shown in the above figure). This board has three Hall- effect sensors that detect the position of the permanent magnet, and thus the position of the pulley and the flap.

The figure above shows the escrow flap in home position, that is, the position it has until the customer either accepts or cancels the purchase. Any inserted coins remain inside the escrow funnel.

In the figure below the customer has accepted the purchase and the escrow motor have turned the flap to the Accepted Purchase position. The coins fall into the coin box.

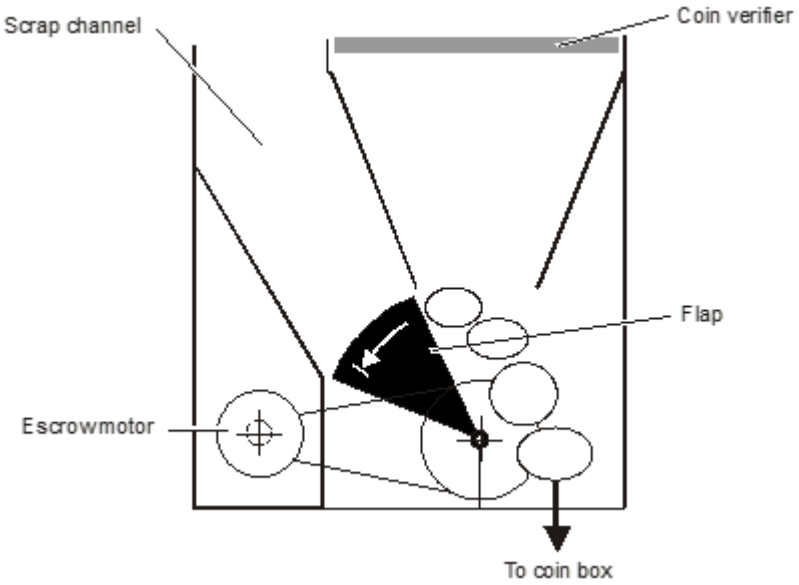

Figure 11, Escrow in Accepted Purchase position.

In the next figure, the customer has cancelled the purchase and the escrow motor has turned the flap to the Cancelled Purchase position. The coins fall into the coin return cup.

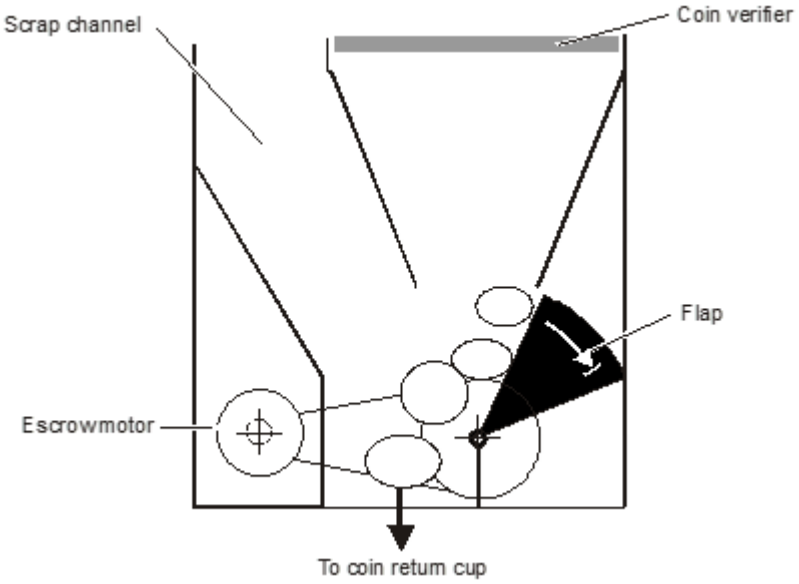

Figure 12, Escrow in Cancelled Purchase position.

4.1.1.4 Coin handling board

A PCB assembly named Coin Handling Board is mounted on the left side of the coin unit.

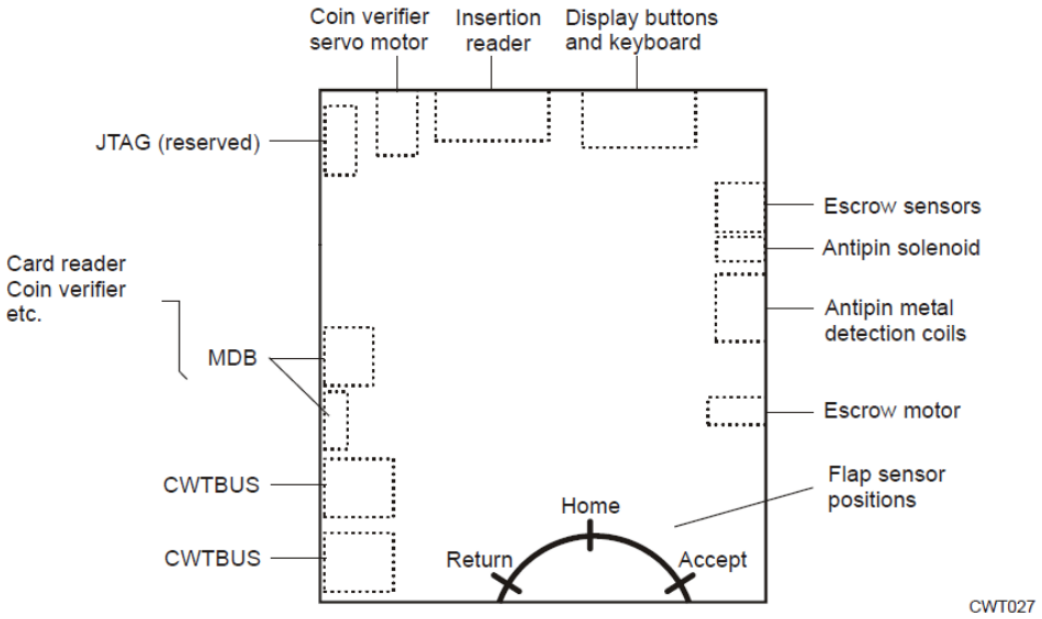

Figure 13, Coin handling board as seen from the solder side.

The coin handling board, with its own AVR (micro controller), controls the functions of the coin system module. The board, which connects to the CPU board via the CWT BUS, also serves as an interface between the display buttons in CWT Compact and an optional card reader. The AVR firmware can be updated using a PC.

A screen print at the bottom of the board indicates the position of the flap sensors mounted on the component side. The sensors are affected by the tiny permanent magnet fitted on the flap pulley.

4.1.1.5 Coin box

The coin box has 4.6 litre capacity. A presence sensor and software detection of when the box is near full and full is also built into the system.

Coin collection personnel must have the proper access privileges to be able to open the pedestal door. All access attempts are logged in CWT Compact and are transferred to the WebOffice management system.

All structural joints on the coin box are riveted or welded. Screw fittings are not used. This reduces the risk of anyone breaking into the coin box without leaving any traces.

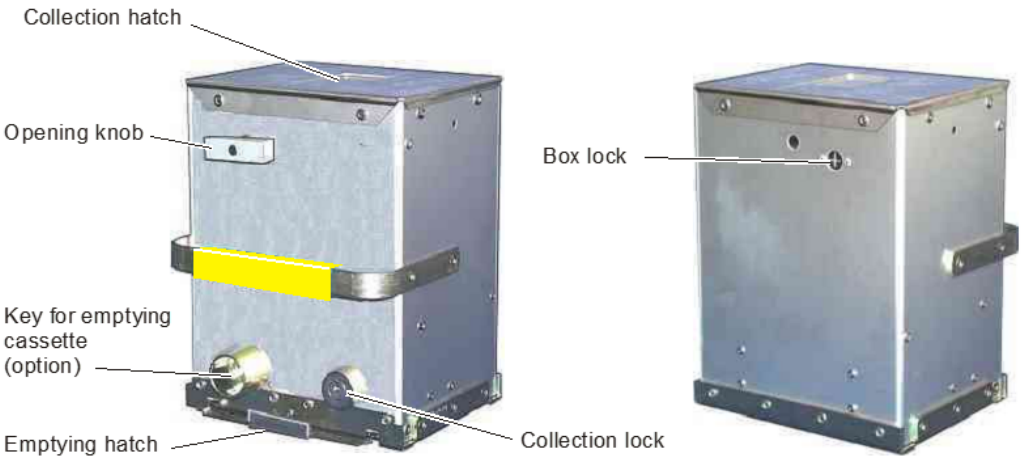

Removing the coin box activates a micro switch mounted inside the vault.

For security reasons, the design of the coin box is not described in detail in this manual. For operation and maintenance instructions, see Changing and emptying the coin box 70.

4.2 Graphical STN & TFT displays

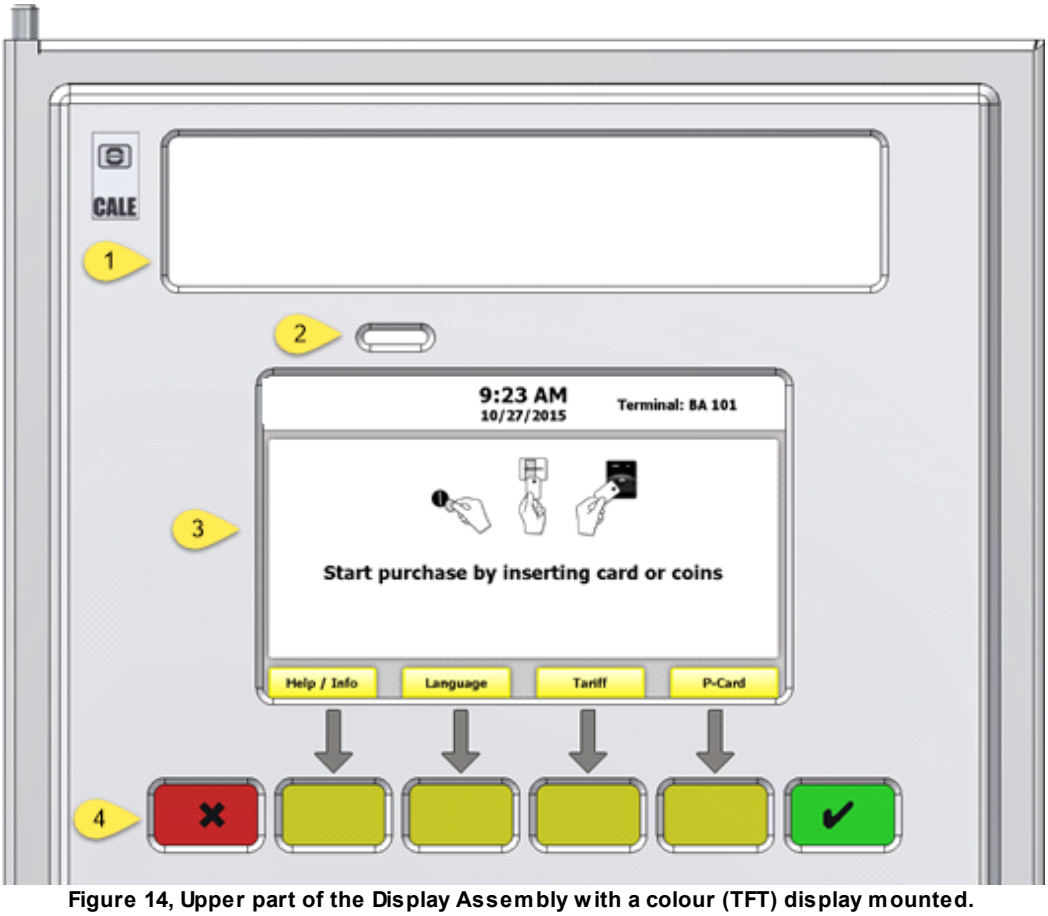

Figure 14, Upper part of the Display Assembly with a colour (TFT) display mounted.

The display assembly is build up with the following components:

1. Notification area. This area can be used to display information tha will not change often. Not available in all models
2. Warning/Error Indicator
3. Display module
4. Dynamic buttons (depending on the model)
5. Keyboard (not visible)

Notification Area

The notification area is a transparent area with an inlay. The inlay ca be pulled out and replaced with print to display information about e.g. the terminal ID.

Warning/error indicator

Figure 15, Position of warning/error indicator and ambient light sensor.

The warning/error indicator and the ambient light sensor are mounted on the display printed circuit board.

The warning/error indicator can light with either red or yellow colour.

RED = Error
YELLOW = Warning

Dynamic buttons & keyboard

There are four yellow software-controlled Piezo buttons below the terminal display. The function of each button is described in the terminal display and is fully customizable and programmable. The ACCEPT (green) and CANCEL (red) buttons are located on each side of the 4 software-controlled buttons and contain symbols that also are shown in the display to provide a user-friendly interface. The function of the buttons changes dynamically depending on the current phase

of a purchase or information retrieval. The current function of a key is indicated by an adjacent caption or instructive text in the display.

The CWTC S3A terminal has an optional full alphanumeric Piezo keyboard that can be used to enter the vehicle registration number, zone number, space number or any other identifier to a purchase.

4.3 Data communication

WebOffice

WebOffice is a back-office service for remote management of your terminals and for financial and statistical purposes. The CWT Compact communicates with WebOffice via GSM/GPRS, 3G or LAN using the TCP/IP protocol.

Transaction processing

Purchase data can be stored in a non-volatile memory device inside the CWT Compact, but in some card payment applications the data is immediately transferred to an external source, such as WebOffice, without being stored anywhere inside the terminal.

Coins must be collected on site by emptying or replacing the coin box.

Collection of card purchases can be done either on site by means of a memory device such as a USB stick, or the data can be transferred automatically to the WebOffice database on a regular basis where the operator can process the data in several ways.

4.4 Print system

CWT Compact terminals can be equipped with a thermal printer using direct thermal printing to generate characters, symbols and graphics.

Both landscape and portrait orientation are supported. The document length is 75 – 100 mm. Paper loading is automatic and full cutting is supported. There is a translucent sensor for preprinted black marks used for precise positioning of printing and cutting.

The printer module consisting of the printer and the paper supply roll are positioned on a vertical main assembly plate that can easily be removed. The printer module is held in position by means of hinges on the door frame and a locking hatch. The location of the lock hatch depends on the version of the printer shelf. See Printer mounting 37.

The printer is connected to the CPU board via a serial interface.

The printer firmware can be updated via WebOffice.

4.4.1 Zebra printer

This section describes the printer exterior and the function principles. See the CWT Software Configuration Handbook for information regarding all other aspects of printer control and printer settings.

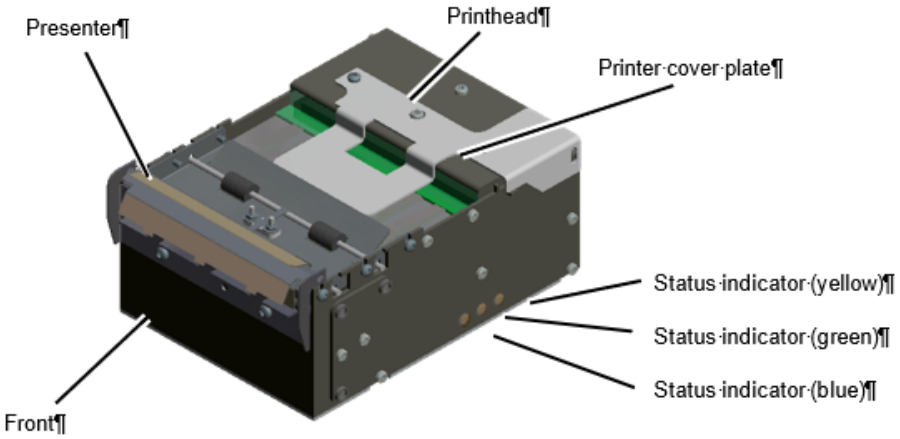

Printer, front view

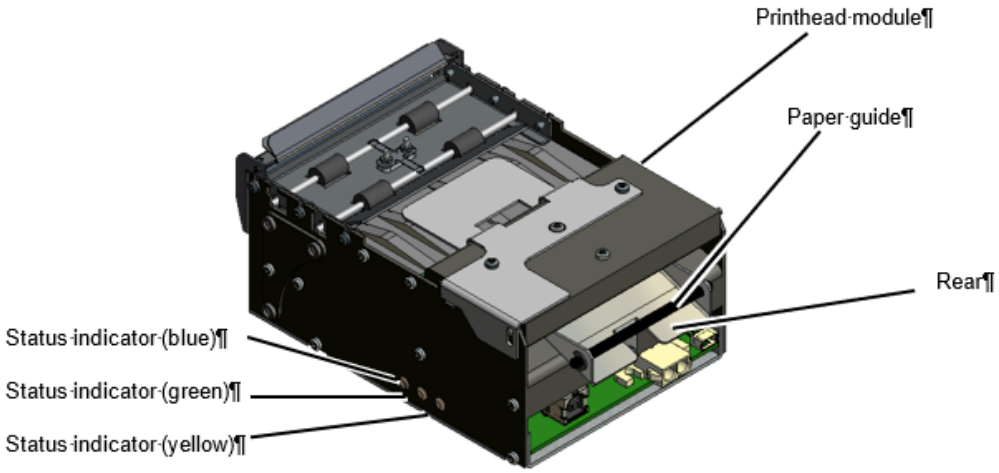

Printer, rear view

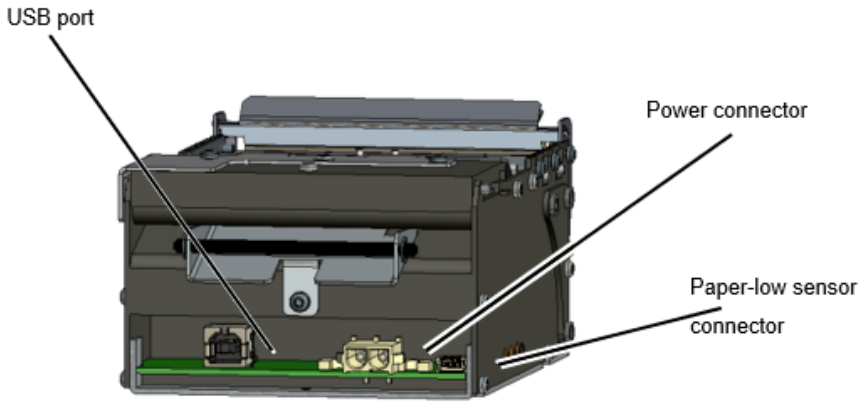

Printer connectors

The print speed can be changed for optimal print quality and power consumption. The presenter speed needs to be changed accordingly as described in the CWT Software Configuration Handbook.

The printer supports 0.054–0.11 mm paper thickness (55 – 110 g/m2) including self-adhesive.

4.4.1.1 Print head

The print head module can easily be opened for operator access to the paper path and the print head for maintenance purposes.

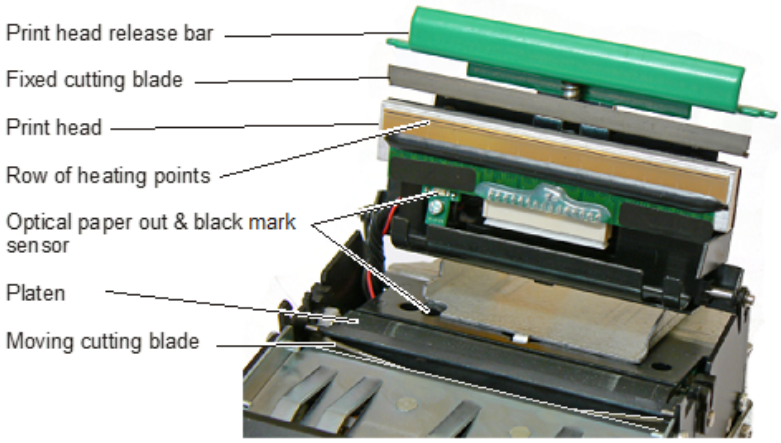

Print head in raised position.

The print head consists of a ceramic plate with a large number of heated points positioned in a line perpendicular to the feed direction of the paper. When a point is heated, it warms the heat-sensitive top layer of the paper to a temperature above 70 °C which develops a black or blue dot (depends on the type of paper used).

Print speed, number of burn pulses and burn time can be adjusted for optimal print result. See CWT Software Configuration Handbook.

4.4.1.2 Sensors

The printer has a number of physical sensors but their function can vary depending on when, in the print cycle, the sensor is activated.

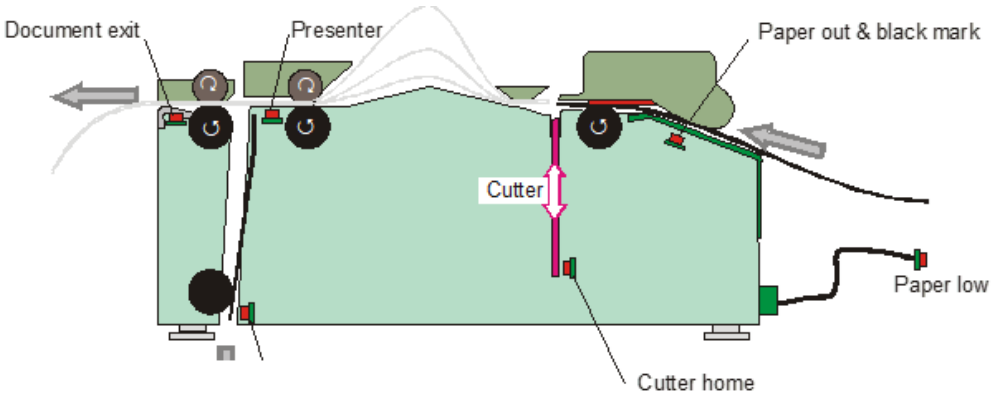

Sensors

Physical sensor	Function
Paper low	Input connector for the external paper low sensor.
Paper out / Black mark	Detects paper presence and black marks. Translucent sensor. If the documents have pre-printed information, for instance a logotype, each document usually also have a pre-printed black mark for exact positioning of the printed elements and the cutting. Because the combined paper out and black mark sensor lights through the paper, it will detect a black mark irrespective of which side of the paper that has the black mark. If the length of the detected black area exceeds the set maximum black mark length value by 5 mm this is interpreted as out of paper.
Cutter home	Cutter mechanism in home position.
Presenter	Document presence in presenter area.
Document exit	Document presence / Document taken.

Based on the status of the sensors the printer can determine if there is a paper jam, for instance in the paper entrance or presenter region.

4.4.1.3 Feed button

The function of the feed button have been slightly changed in printer firmware 4.1. See below for a description of how it works in both firmware 3.82 and 4.1.

Printer firmware 4.1

The blue feed button ○ has several functions:

- A short press of the button will print a blank ticket synchronized with the blackmark.
- Press and hold the button for three seconds then release it. This will feed and present any data in the print buffer. If the buffer is empty a self-test will be printed showing version and date of the firmware, control board revision,

serial number, name of loaded fonts and logotypes and the parameter settings.

Printer firmware 3.82

The blue feed button has several functions:

- Pressing and releasing the button will feed, and present any data in the print buffer. If the buffer is empty a self-test will be printed showing version and date of the firmware, control board revision, serial number, name of loaded fonts and logotypes and the parameter settings.
- With paper removed from the printer, pressing and holding the feed button down while closing the print head will make the printer enter a top-of-form sensor calibration mode. The green status indicator should change from blinking to steady light. Insert paper into the printer within 6 s as described in section Loading paper. The printer should start feeding the paper back and forth to calibrate the black-mark sensor.

4.4.1.4 Status indicator

The yellow status indicator has several functions.

- If printer firmware 3.82 is used the status light is constantly on when the printer is operational. With printer firmware 4.1 the status light is constantly turned off as long as the printer is operational and there are no errors. This change has been introduced to save power
- Flashing rapidly — Indicates an error. Hold down the feed button and the number of blinks will reveal the type of error.

The Error indication is reset

- When the error condition is removed.
- The Next time the power is switched ON.
- When the print head is lifted and then lowered.

No. of blinks	Error
1	Presenter jam. Paper cannot be ejected or retracted.
2	Cutter cannot return to home position.
3	Out of paper.
4	Print head lifted.
5	Paper feed error (below print head).
6	Print head temperature exceeds 60 °C.
7	Presenter jam. Motor cannot rotate.

No. of blinks	Error
8	Paper jam during retract.
11	Black mark calibration error.
Rapidly flashing	Checksum error during firmware loading.
Steady light	Wrong firmware type or target detected at firmware loading.
2 blinks – pause – – 2 blinks	Paper low.

4.4.1.5 Power indicator

The green power indicator is ON when 24 V is connected accordingly to the printer.

4.4.1.6 Printer mounting

The printer is mounted on a shelf and secured by means of screws on the bottom of the printer.

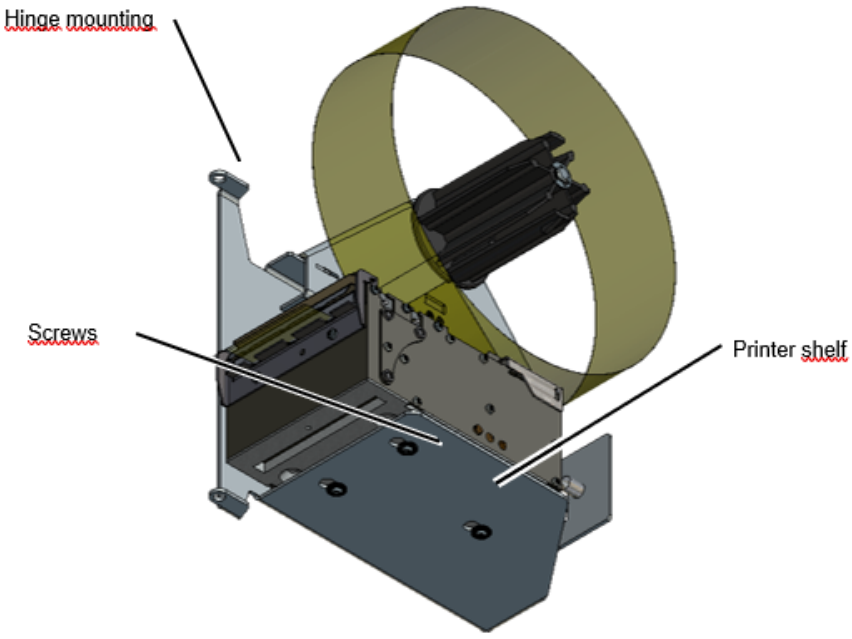

To remove the printer module, pull the locking latch while you swivel the module to the right, then lift the complete module away from the hinges on the door frame. To replace the printer module, place it on the hinges on the door frame and swivel the module into its locked position.

To remove the actual printer from the module, simply remove the three screws holding it in place.

4.4.1.7 Paper supply

The paper roll is supported by a hub designed for correct paper roll position with 58 mm rolls.

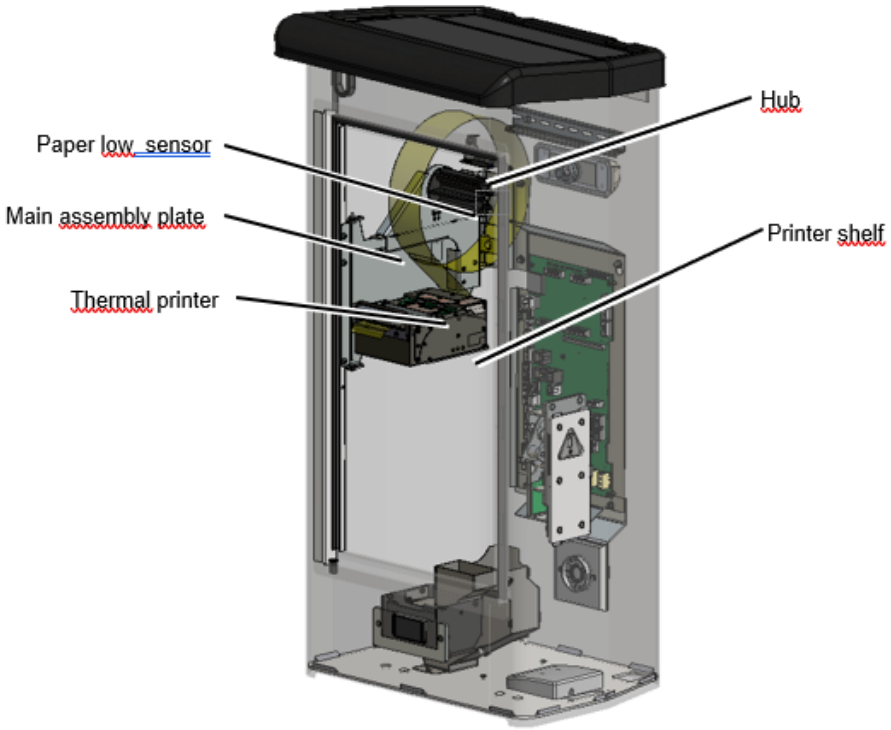

An optical paper low sensor is mounted at the main assembly plate behind the paper roll. The sensor changes its state when there are about 150—200 tickets left on the roll. Rather than using the optical near end sensor, it is possible to use an internal ticket counter and enter the amount of printed tickets after which an alarm or warning should be generated. An out-of-paper sensor is built into the thermal printer.

4.4.2 GeBe GTP4672 Thermal printer

Note:
The printer shelf comes in two variates.
The older version (version 1) has a long plate mounted in the cabinet with a lock mechanism at the end of the plate. The newer version (Version 2) has lock directly after the hinge.
Both types are displayed in the manual.

Reference:
This section describes the printer exterior and the function principles. See the CWT Software Configuration Handbook section GEBE printer for information regarding all other aspects of printer control and printer settings.

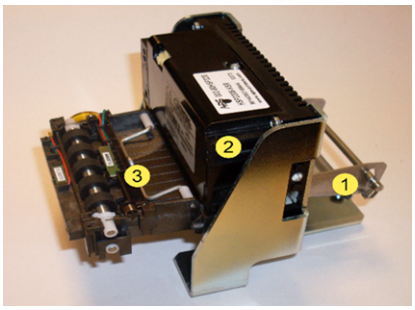

Figure 16, Printer shelf version 1

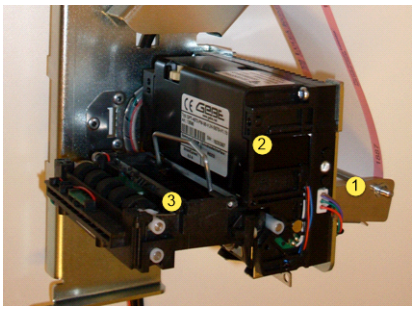

Figure 17, Printer shelf version 2

1. Paper guide
2. Printer
3. Ticket presenter

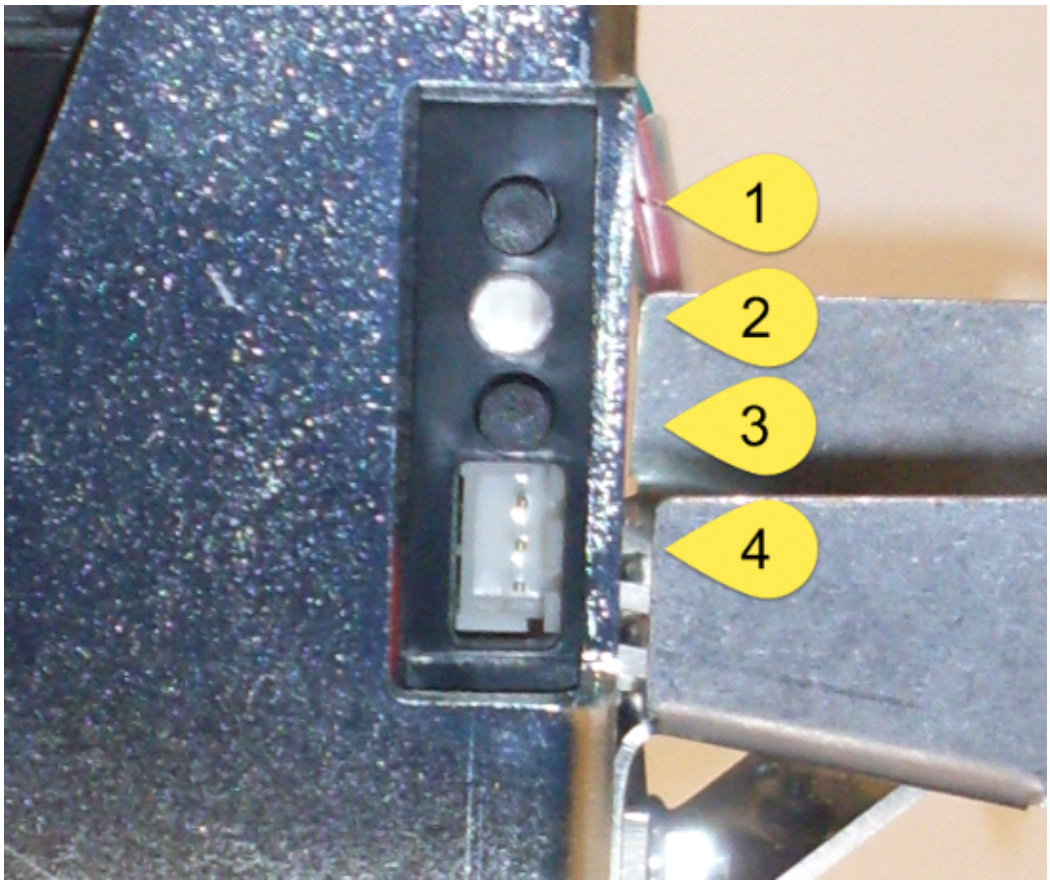

Figure 18, Status indicator and buttons.

1. Test printout button
2. Status indicator. The Status Indicator will blink when an error occurs
3. Feed button
4. Connector for a paper out sensor

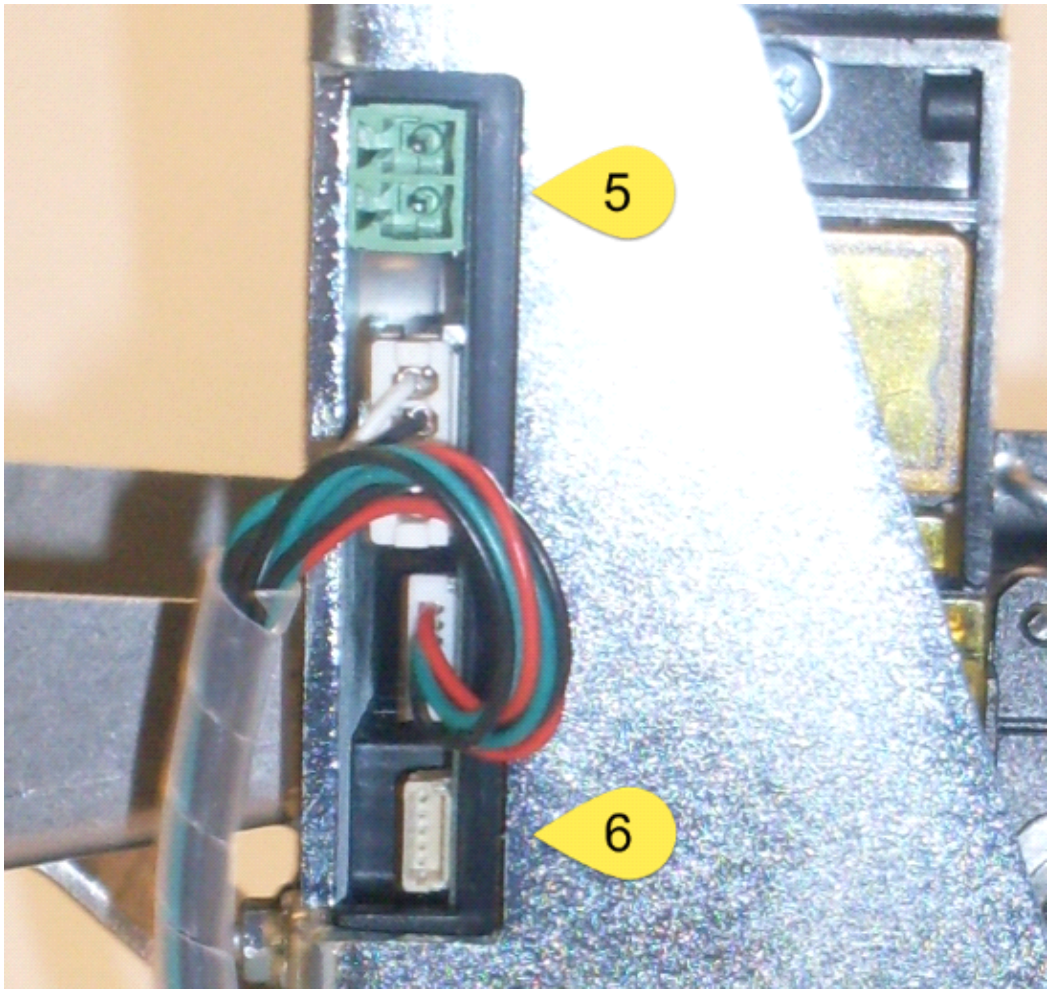

Figure 19, Power and Data connectors.

5. Power connector 12 V
6. RS 232 Data connector

4.4.2.1 Sensors

The printer has four important sensors:

Physical sensor	Function
Paper low	Input connector for the external paper low sensor.
Paper out / Black mark	Detects paper presence and black marks. Translucent sensor. If the documents have pre-printed information, for instance a logotype, each document usually also have a pre-printed black mark for exact positioning of the printed elements and the cutting. Because the combined paper out and black mark sensor lights through the paper, it will detect a black mark irrespective of which side of the paper that has the black mark. If the length of the detected black area exceeds the set maximum black mark length value by 5 mm this is interpreted as out of paper.
Presenter	Document presence in presenter area.

Document exit	Document presence / Document taken.

Based on the status of the sensors the printer can determine if there is a paper jam, for instance in the paper entrance or presenter region.

4.4.2.2 Printer mounting

Note:
The printer shelf comes in two varieties.
The older version (version 1) has a long plate mounted in the cabinet with a lock mechanism at the end of the plate.
The newer version (Version 2) has lock directly after the hinge.
Both types are displayed in the manual.

Printer shelf version 1

The printer is mounted on a shelf and secured by means of screws on the bottom of the printer.

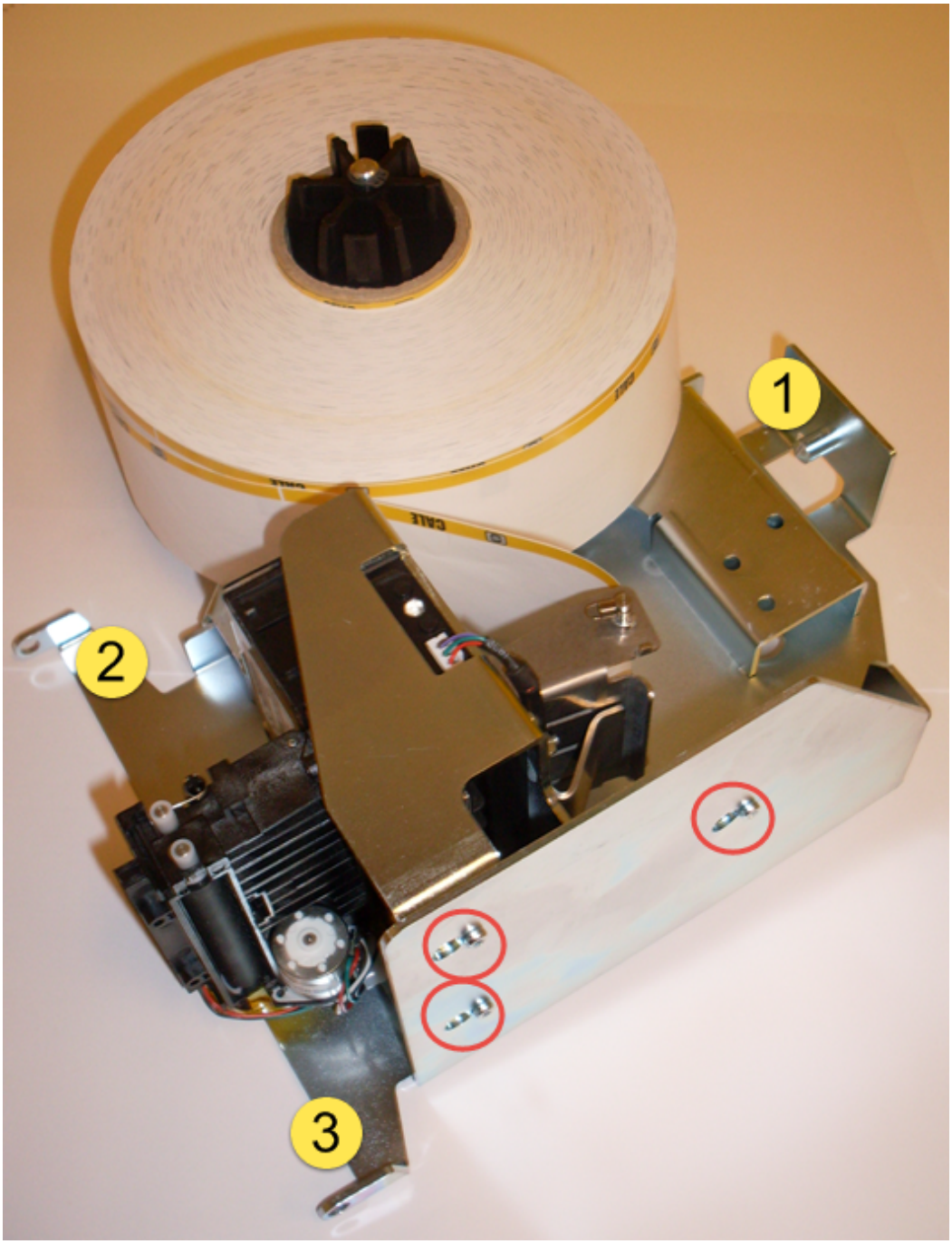

Figure 20, Printer mounting on Printer shelf version 1

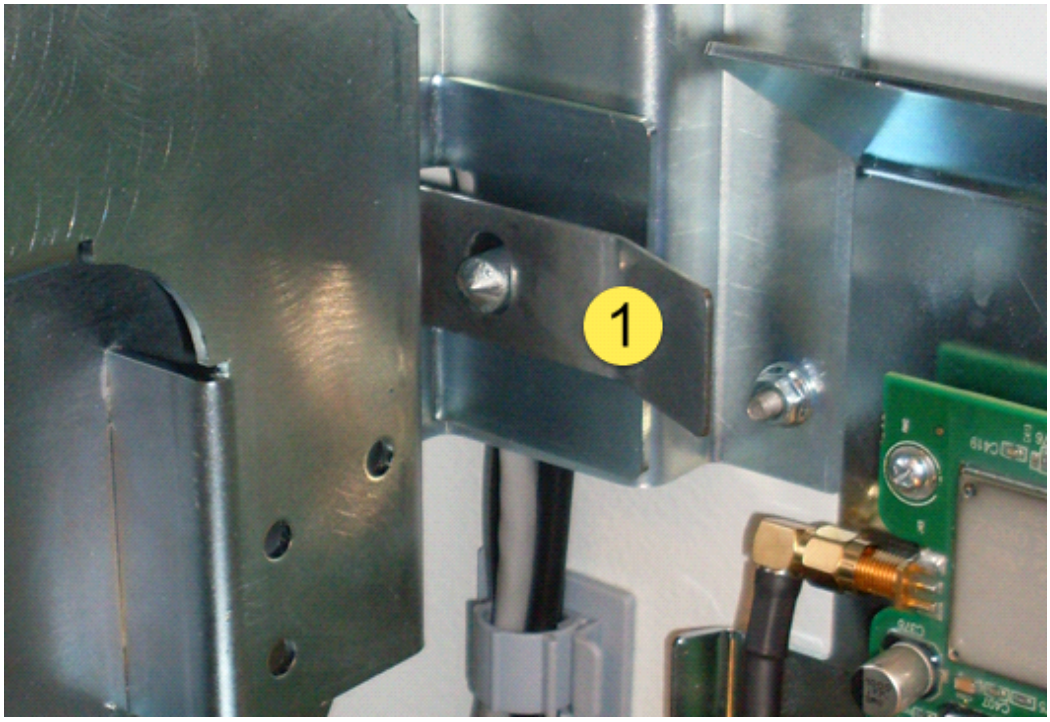

Figure 21, locking latch on version 1

To remove the printer module, pull the locking latch (1) while you swivel the module to the right, then lift the complete module away from the hinges (2 and 3) on the door frame. To replace the printer module, place it on the hinges on the door frame and swivel the module into its locked position.

To remove the actual printer from the module, simply release the three screws holding it in place, move the printer forward and lift it from the mounting plate.

Printer shelf version 2

The printer is mounted on a shelf and secured by means of screws on the back of the printer.

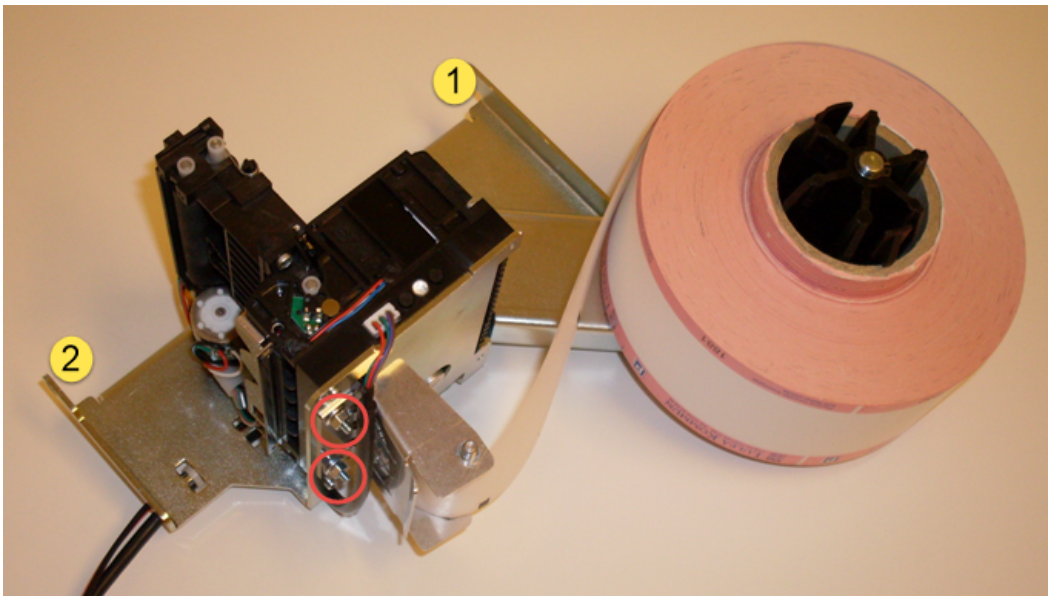

Figure 22, printer mounting on Printer shelf version 2

To remove the printer module, pull and swivel the module to the right, then lift the complete module away from the hinges (1 and 2) on the door frame. To replace the printer module, place it on the hinges on the door frame and swivel the module into its locked position.

To remove the actual printer from the module, simply release the two bolds holding it in place. Lift the printer from the mounting plate.

4.4.2.3 Paper supply

The paper roll is supported by a hub designed for correct paper roll position with 58 mm rolls.

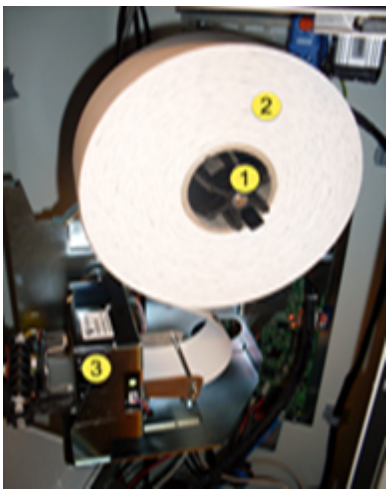

Figure 23, Printer module on printer shelf version 1.

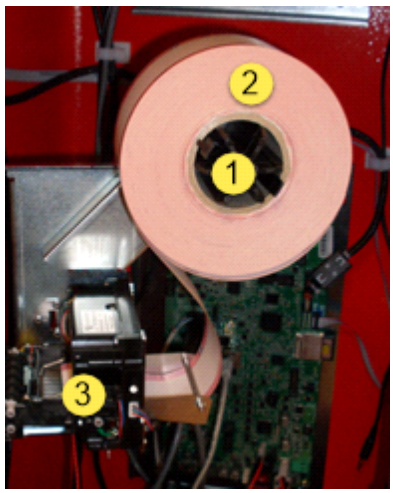

Figure 24, Printer module on printer shelf version 2.

1. Hub
2. Paper roll
3. Printer

An optical paper low sensor is mounted at the main assembly plate behind the paper roll. The sensor changes its state when there are about 150—200 tickets left on the roll. Rather than using the optical near end sensor, it is possible to use an internal ticket counter and enter the amount of printed tickets after which an alarm or warning should be generated. An out-of-paper sensor is built into the thermal printer.

4.4.3 Preprinting on printer media

There are a few guidelines that need to be followed to ensure operation:

- Due to the heat developed during printing, the preprint shall meet the requirements applicable for preprinting on paper intended for laser printing. OCR-blind ink shall be used.

- Ink used for preprinting on the thermal side shall be non-abrasive.
- The ink shall not smear while wound up on the supply roll, or during the printing process.
- Ink used for preprinting in the black mark zone and in the centre of the paper on the non-thermal side shall have no influence on the reflective IR-sensor. OCR-blind ink shall be used.

Print side

preprint is not recommended in the black mark zone on the inner side unless the above conditions are met.

Paper low sensor area

No preprint is allowed on any side of the paper in a 2-mm wide area from the edge of the roll.

4.4.4 Black mark location

The GeBe printer uses a different location for the black mark the Zebra printer in older machines.

Verify that you use the correct type of paper.

Warning:
When using black mark, you cannot use rolls for a Zebra printer in a GeBe printer as the black marks are on different locations on the paper

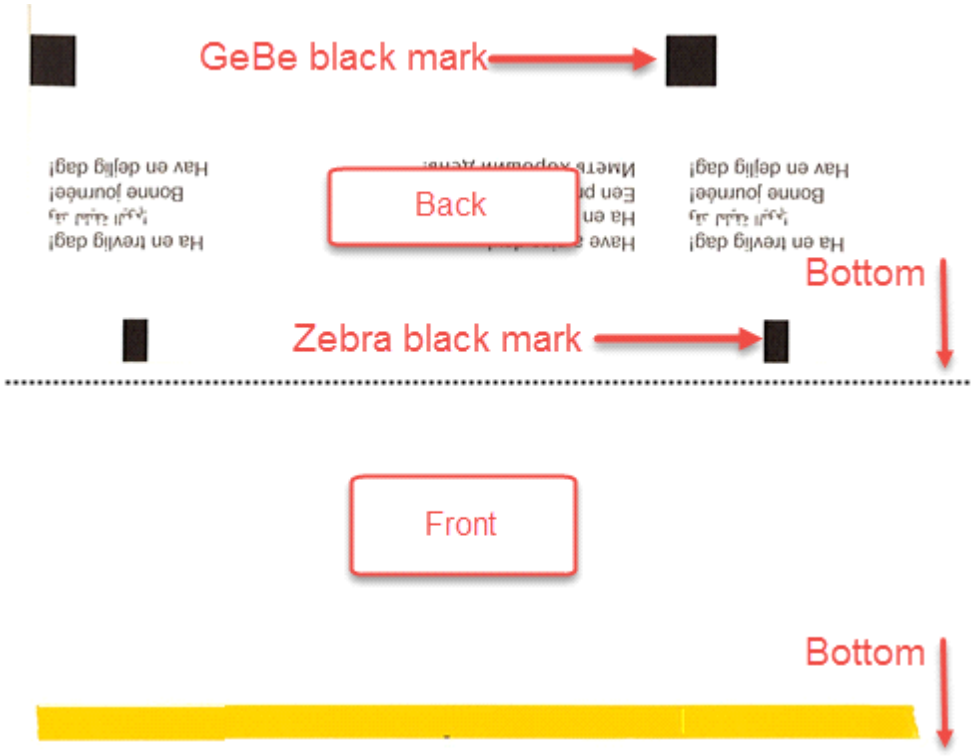

Figure 25, Paper with both Zebra and Gebe black marks

4.5 The service menu

The service menu is shown when the CWT Compact switches into service mode when you open the cabinet door. The numerous options in the service menu let you:

1. Change terminal settings.
2. Export and import terminal settings.
3. Update the software and firmware of the terminal.
4. Export credit card transactions, etc.

Most of the functions available in the service mode can, however, be performed more conveniently through the WebOffice Service.

The terminal exits the service mode when you close the door again. The printer can produce a printout showing the software and firmware versions installed in the terminal and numerous data regarding the printer, including the current printer settings. This lets you check any changes you have made while in the service mode. This feature is default enabled but can be disabled since the CWT application 2.36.

Reference:
For a detailed description of the service menu see CWT Software Configuration Handbook.

4.6 Mechanical design

In this Chapter:

- General 43
- Product label 43
-
- Inside the pedestal 44
- Door locks 46
- Door-open sensors 49

4.6.1 General

The terminal comes in 2 parts:

1. the upper part or Cabinet. See
2. the lower part or Pedestal. See Inside the pedestal 44

The cabinet can be detached from the pedestal and this is the way the CWT Compact is usually delivered from the factory.

The cabinet can be removed from the pedestal at a later stage, for example for maintenance or upgrading reasons, or if the terminal is to be taken out of operation for a lengthy period.

The configuration of the CWT Compact is highly flexible and varies depending on installed pay units etc.

4.6.2 Product label

Both the cabinet and the pedestal have a product label specifying the Type, Colour, and Quality Inspection during production

The figure below depicts the information shown on the product label attached inside the cabinet.

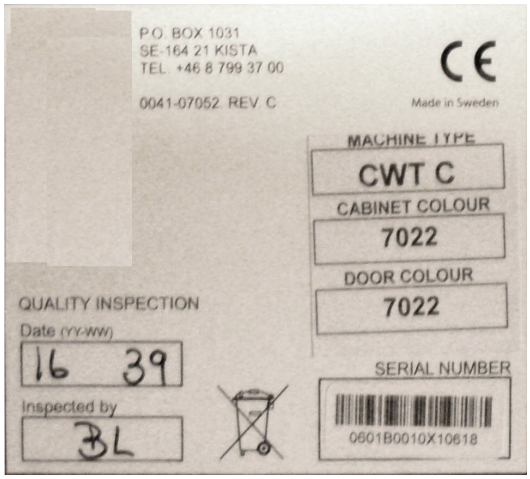

Figure 26, Cabinet Product label.

4.6.3 Inside the pedestal

The contents of the pedestal may vary depending on local regulations, needs for specific electrical components, etc.

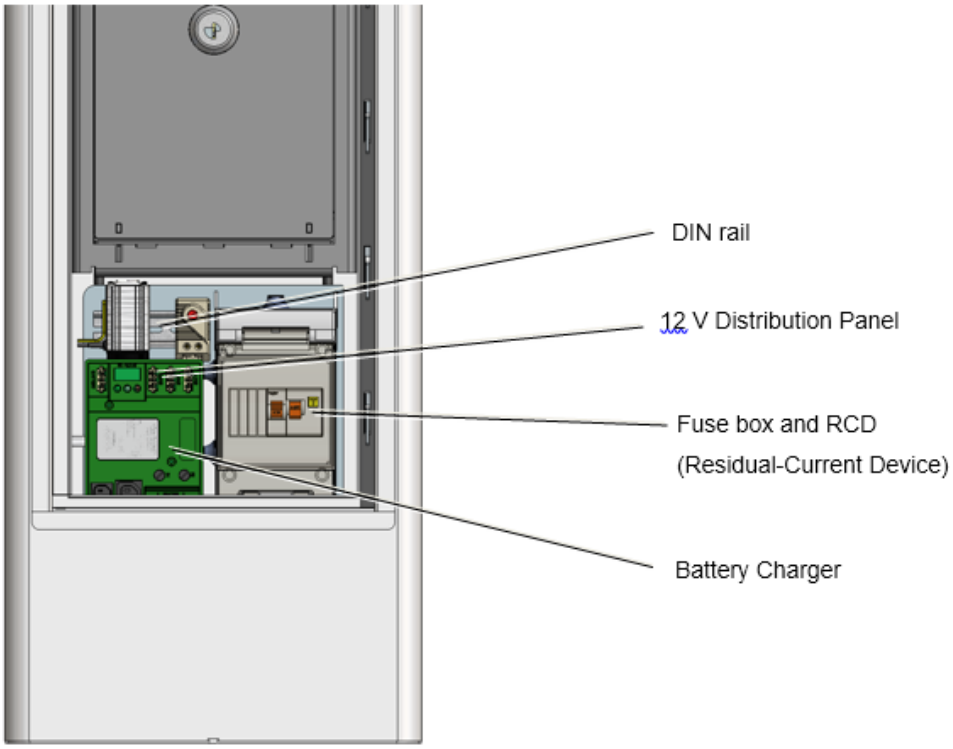

Figure 27, Pedestal interior (example)

4.6.3.1 COIN BOX Vault

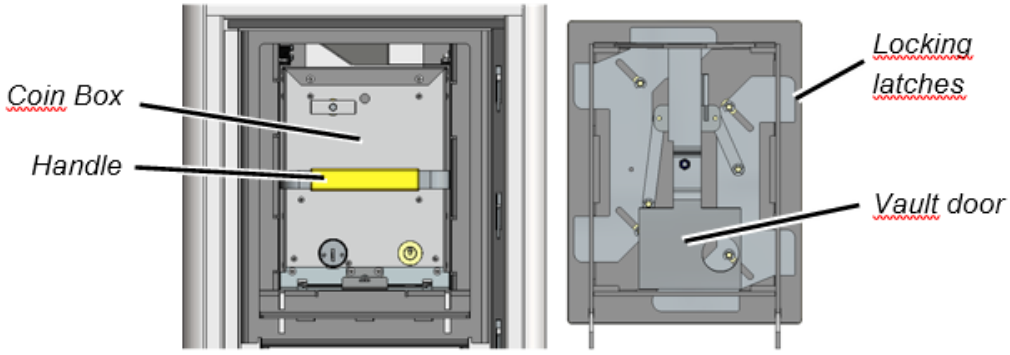

Figure 28, Vault interior.

The coin box vault is made of 4 mm sheet metal with side drilling protection.

The vault door, made of 6 mm armoured steel, has six drilling protected locking latches along its edges.

The coin box vault door lock, placed inside a drilling protected and anti-bolster fitting, is of a high security mechanical type such as Kaba or any of the Abloy locks Guard-x, Exec and Protec. All of them use a key profile that can only be obtained from the original lock manufacturer. The key does not have any serrated surfaces neither any sharp or pointed edges. Registered locks and keys are available.

The key can only be removed when in the locked position. It is impossible to close the outer pedestal door until you have locked the vault door and removed the key.

When collecting the coins, you can pull out the coin box and let it rest on top of the vault door before you start lifting the box.

When open, the lowered vault door can easily be lifted away from the vault for repair or replacement. No tools are required for this.

Coin Box

Seen from outside in, the coin box is protected by the pedestal and the coin box vault.

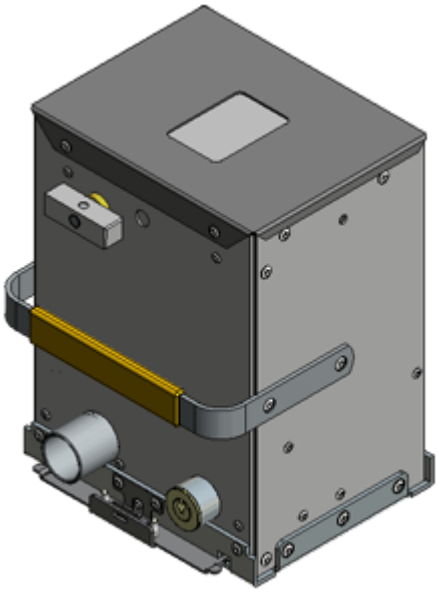

Figure 29, Coin box.

4.6.4 Door locks

Each door is secured in closed position by means of four locking latches.

4.6.4.1 Mechanical locks

The standard lock in the CWT Compact is a mechanical Exec lock from Assa Abloy. It is a mechanical lock that is opened with a key. The lock can be protected against dirt and water by two flaps that slide apart when the key is inserted (option).

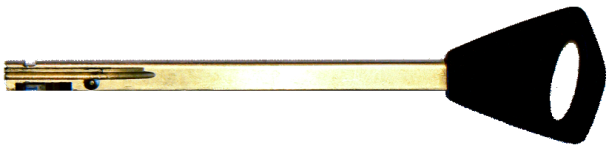

Figure 30, standard mechanical door key.

4.6.4.2 Electronic locks

The CWT Compact terminals also have an optional electronic lock system with online central administration and authorization via WebOffice. This solution replaces the expensive and tedious handling and administration of keys because all persons that need access to a CWT Compact use the same type and version of door key that is more to be seen as a door opening tool.

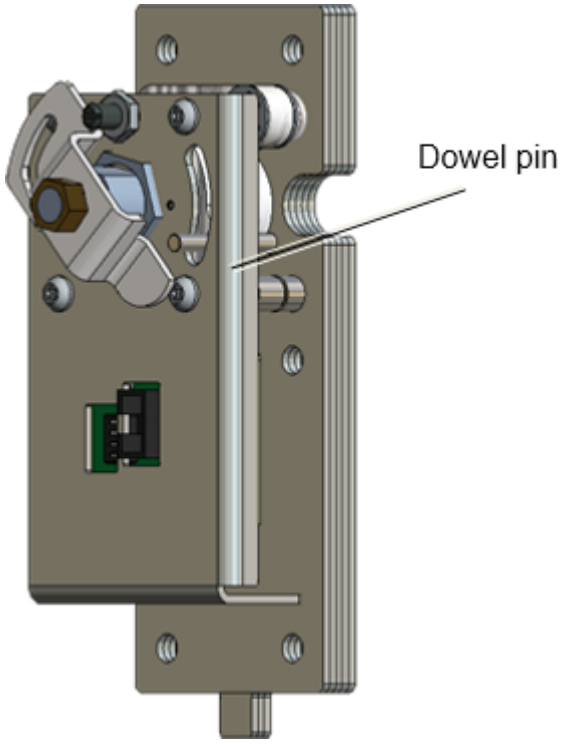

Figure 31, Electronic-locking mechanism.

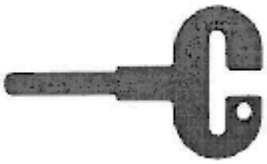

Figure 32, Door key for electronic locks

There is a round key hole at the right side of both the cabinet and the pedestal.

The inside of each hole is covered by a protective plate. To enable the insertion of a key, this plate will automatically move out of way if these conditions are met:

- You are registered as a user in WebOffice and have been given the proper privileges for access times, opening frequencies, compartment (cabinet, pedestal or both), etc.
- You identify yourself by inserting an access card in the card reader and entering an optional PIN code at the keyboard (CWTC S3A with keyboard and CWTC Touch). In a CWTC S3A without keyboard and in terminals without a card reader, you place a special ID card against an RFID reader mounted in the plastic casing in the right bottom corner.

NOTE:
After you have opened the upper door, the lock will be closed again after a 15 second time out to save power. Because the terminal now is in the service mode you cannot prove your identity and get the necessary privilege to open the door again. Instead you have to press an Open Upper Door key shown in the start page of the service menu to open the lock mechanism again.

The pedestal door lock also has a 15 second time out, but you can still run the normal application with the upper door closed and open the lower door lock as usual.

Master key

The electronic lock system also provides an opening alternative in case of power failure, software failure or communication disturbances. Inside the electronic lock there is a regular lock as well. A mechanical master key is used for emergency access, but the protective plate has to be pushed up manually first by means of a small screwdriver, paper clip, or similar.

Latches

The electronic lock has a relay operated latch mechanism that prevents anyone from opening the key lock unless the person can prove his identity.

Note:
The minimum voltage required for proper operation of the electronic locks is 11.1 V at room temperature (20 °C).

Configuration of the E-locks

The upper and the lower E-locks are of the same type. Each lock is a DIP-switch whose setting tells the system if the lock is mounted in the cabinet or pedestal.

The E-locks are connected to the CPU board (Connector J16) board

Please note that if an upgrade from mechanical to electronic lock is desired, the locking bar also needs to be replaced.

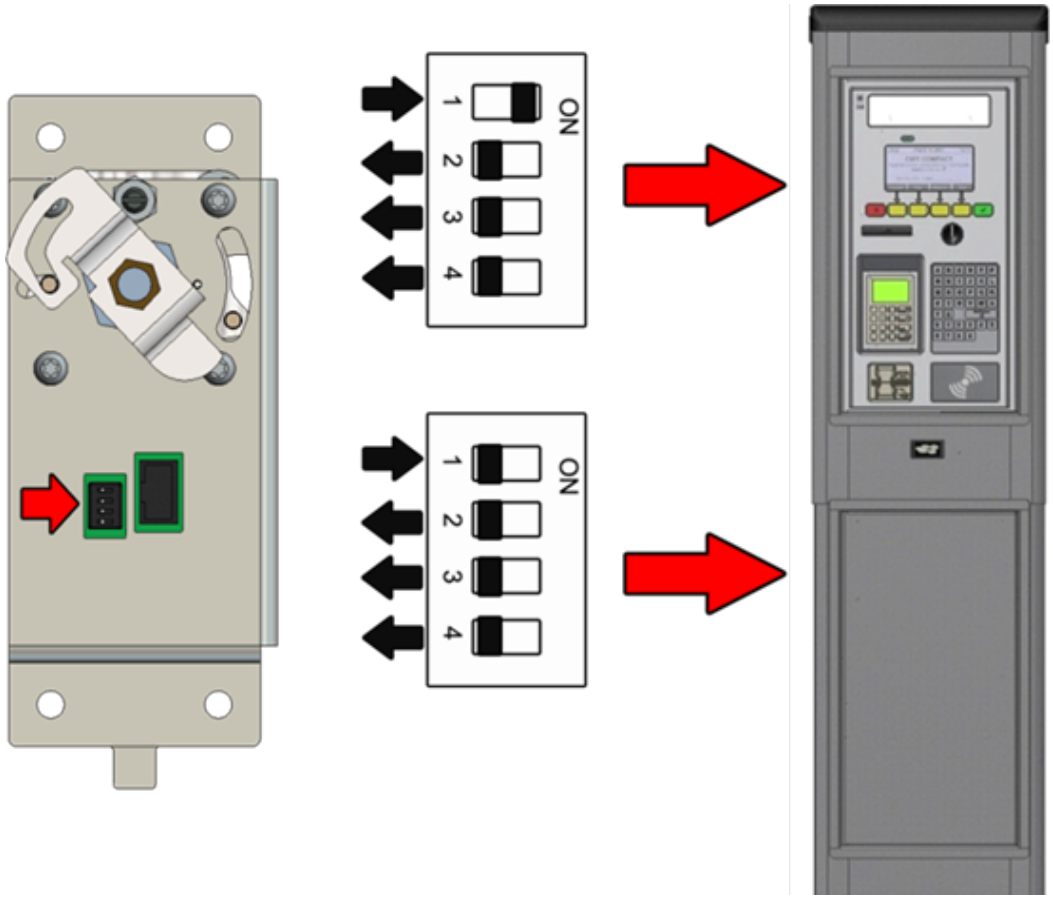

Figure 33, E-lock DIP switch settings

4.6.4.3 Door-open sensors

Both doors have a door-open sensor. All attempts to open the terminal are logged in the CWT Compact and the information is transferred to WebOffice.

The door-open sensor consists of a permanent magnet mounted on the door and a magnetic field sensitive sensor mounted inside the door frame.

Figure 34, Door-open sensor in the cabinet.

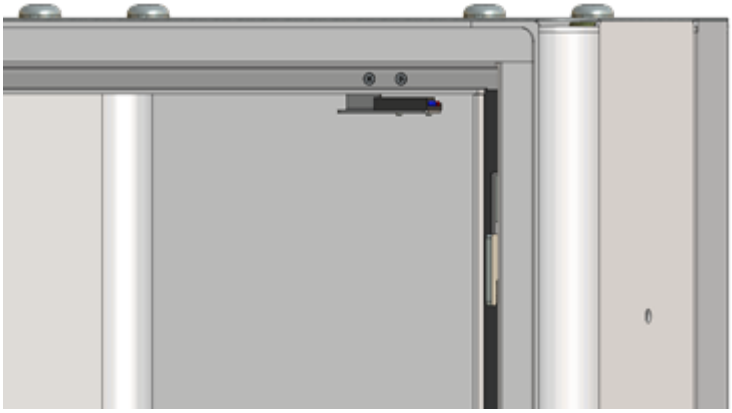

Figure 35, Door-open sensor in the pedestal.

4.6.5 Heating system

The CWT Compact can be provided with heating in both the cabinet and the pedestal by means of 100 W heating fans and thermostats adjustable between 0 and 60 °C.

Both the fan and the thermostat are mounted on existing DIN rails. The heating fan is connected to one of the two 230 V (115 V UK) outlets (for the heating radiator) and one 12 V outlet (for the fan itself) in the battery charger module located in the pedestal.

4.7 Power supply

CWT Compact terminals are powered by a gel type, maintenance free lead-acid battery placed in the pedestal of the terminal. The battery is charged by mains power 52 or solar power 51. In the latter case the terminal has a solar cell panel mounted at the top.

Alternatively, the terminal can be powered from the battery only which requires regular battery replacement. An alternative is to have the battery charged from a power source that is regularly available, such as a street light post.

Danger:
Always ensure that the external power supply to the terminal is disconnected or switched OFF before carrying out any work on parts that ordinarily conduct dangerous current.

4.7.1 Power control

The battery voltage can be measured automatically on a regular basis and a report can be sent to WebOffice periodically. See the CWT Software Configuration Handbook.

A warning event can be generated and sent to WebOffice if the voltage drops below a certain warning level. The default value is 11.9 V.

The terminal will be set in error state and an error event can be sent to WebOffice if the voltage drops below a certain error level. The default value is 11.5 V.

A restore event will be generated and can be sent to WebOffice when the voltage, while increasing, reaches a certain recovery level. The default value is 12.1 V. A typical measured value is 12.5 V.

Note:
The automatically measured voltage usually differs from the battery voltage measured with a voltage meter without any load applied.

When the battery is being charged, the measured charging voltage will be approximately 13.7 V.

Under certain circumstances, a sleep mode function can be activated if the terminal is solar powered or powered by the battery only.

Important:
The minimum voltage required for proper ticket printing and operation of the electronic locks is 11.1 V at room temperature (20 °C).

4.7.2 Battery charging by solar power

A solar powered terminal has no battery charger. Instead, the solar panel charges the battery via the CPU board and a cable between the CPU board and the battery. The CPU board measures the charging current and if the charging voltage exceeds 18 V a fuse will blow.

The result of the measured charging current is sent to WebOffice. A warning event will be generated if the current drops below the warning level and the terminal will be set in error state if the current drops below the error level. A restore event will be generated when the current reaches the recovery level.

Reference:
See CWT Software Configuration Handbook for more information about this.

Figure 36, CWT Compact solar panel example

4.7.3 Battery charging by mains power

In mains powered terminals the 12 V battery is charged by the battery loader that outputs 12 V (13.8 V) to the battery via a separate 6.3 A fuse.

The charger has three indicators:

GREEN	ON when 230 V (115 V UK) Mains power is available.
YELLOW	ON when charging is in progress.
RED	Initially ON when a deeply discharged battery is being charged.

The charger also has a 12 V distribution panel with three output connectors and two 230 V (115 V UK) outputs for optional heating fans.

A diode in the battery charger protects the circuitry if the battery is connected with wrong polarity. In such a case one or both main fuses F1 and F2 on the CPU board may blow.

The cable from the mains power grid is connected to a termination block in the Pedestal. The termination block contains a residual-current device, optionally combined with a fuse.

4.8 Administrative tools

Flowbird supplies programs and services for credit card administration, collection, terminal maintenance, etc. Contact Flowbird or your nearest Flowbird representative for more information. You are welcome to visit https://www.flowbird.group for details.

4.9 CWT Compact interconnections

This chapter aims to shows how each part of the terminal is connected to the CPU board.

The drawings are available in a separate document: “CWT Compact Cable Diagrams for AVE (2100-0009).pdf”

4.10 CPU board version 0501-E0150 Rev I

Note:
For earlier versions of the CPU board see earlier issues of this document

The CPU board consists of a main printed circuit board assembly. It contains a 32-bit 800 MHz processor with a 256 MB non-volatile flash memory used to store the operating system (Windows CE) and a 512 MB RAM. The latter, including the real-time clock, is backed up by a battery positioned on the CPU board.

Important:
This board requires Compact AVR AVE version 3.0.0.28 or later

The figure below shows the positions of connectors etc. The figure is followed by a list of all connectors and their use.

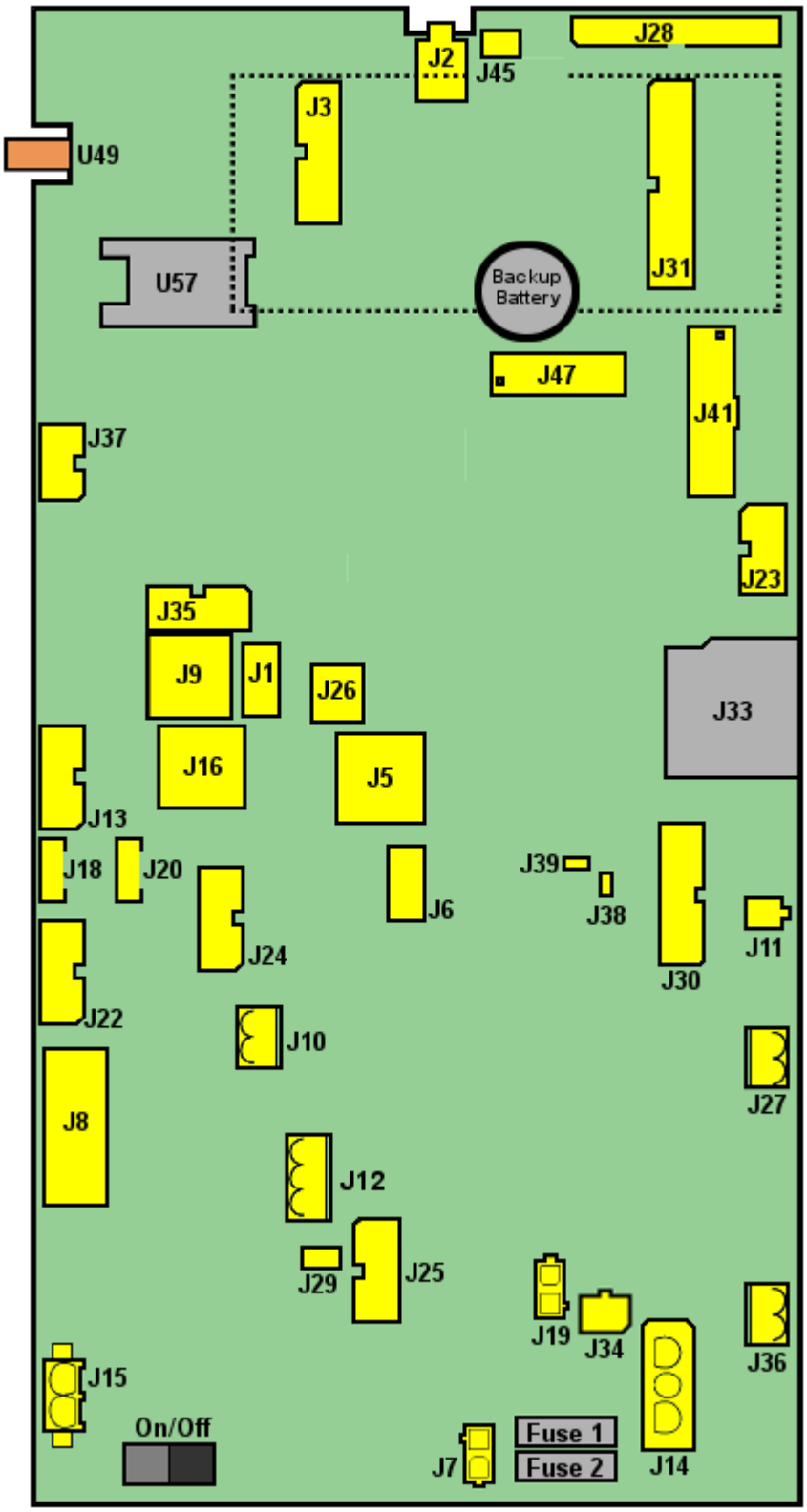

Figure 37, CPU board version 0501-E0150 Rev H

Connector	Com port	Type/Outlet name	Function
F1			4A Fuse ATO

Connector	Com port	Type/Outlet name	Function
F2			10A Fuse ATO
J1		USB0A	USB 2.0 Host Type A
J2			Speaker
J3			Expansion board
J4			Not mounted
J5			Ethernet
J6		USB1	USB 2.0 host type A
J7		12Vprinter	12V Printer from Battery
J8	Com 7	External SPI UART	Serial 2
J9	Com 2		CWT Cap Bus
J10		IN#1	Opto coupled input. E.g. Seismic alarm
J11		Zl-Air Battery	Extra battery Zink-Air
J12		RELAY	Relay Output
J13	Com 9	Internal iMX53 UART	Serial 4 (5V_COM_9)
J14		Bat. IN	Battery 12 V In
J15		24Vprinter	24V Printer
J16		CWT-CAP BUS	CWT Cap Bus
J17			Not mounted
J18		Coin-Box	Coin Box pin 1 and 2 Lower Door pin 3 and 4
J19			12 V to External Pay Unit (12V_1)
J20		Door-SW	Upper Door switches
J21			Not mounted
J22	Com 8	External SPI UART	Printer - Serial 3 (5V_COM_8)
J23		Status LEDs & Ambient light	Status LEDS and Ambient light sensor
J24	Com 1	External SPI UART	Touch controller - Serial 5 (5V_COM_1)

Connector	Com port	Type/Outlet name	Function
J25			AVR JTAG for loading of AVR software
J26		USB0B	USB Device type B
J27		SolarPanel36cell	Solar Panel 36 cells Input
J28		STN-LCD	STN Display
J29			12 V Out from Battery (12V_2)
J30		debug	Debug port
J31	Com 4 (**	Internal iMX53 UART	Expansion board (5V_COM_4)
J32			Wake up button
J33			SD Card
J34			External Light
J35	Com 3 (*	Internal iMX53 UART	External pay unit or bill reader - Serial 1 (5V_COM_3)
J36		SolaPanel	Solar Panel
J37	Com 3 (*	Internal iMX53 UART MDB	External pay unit or bill reader - MDB (12V_MDB)
J38		Boot Mode	Boot Mode
J39		Fuse Volt	Fuse Voltage
J40			Not mounted
J41		Colour Display	Colour display with LDVS and Backlight
J42			12 V Printer
J44			Not mounted
J45			Microphone
J47			JTAG imx53
J48			Not mounted
J49			Not mounted
SW8		OFF ON	On/Off Switch
U49		WGSM	Modem Antenna

Connector	Com port	Type/Outlet name	Function
U57			SIM Card

4.11 Terminal measurements

Note:
The CWT Compact is available in two heights, the one presented in the figure above (1616, 5 mm) and a shorter one (1516,5 mm).

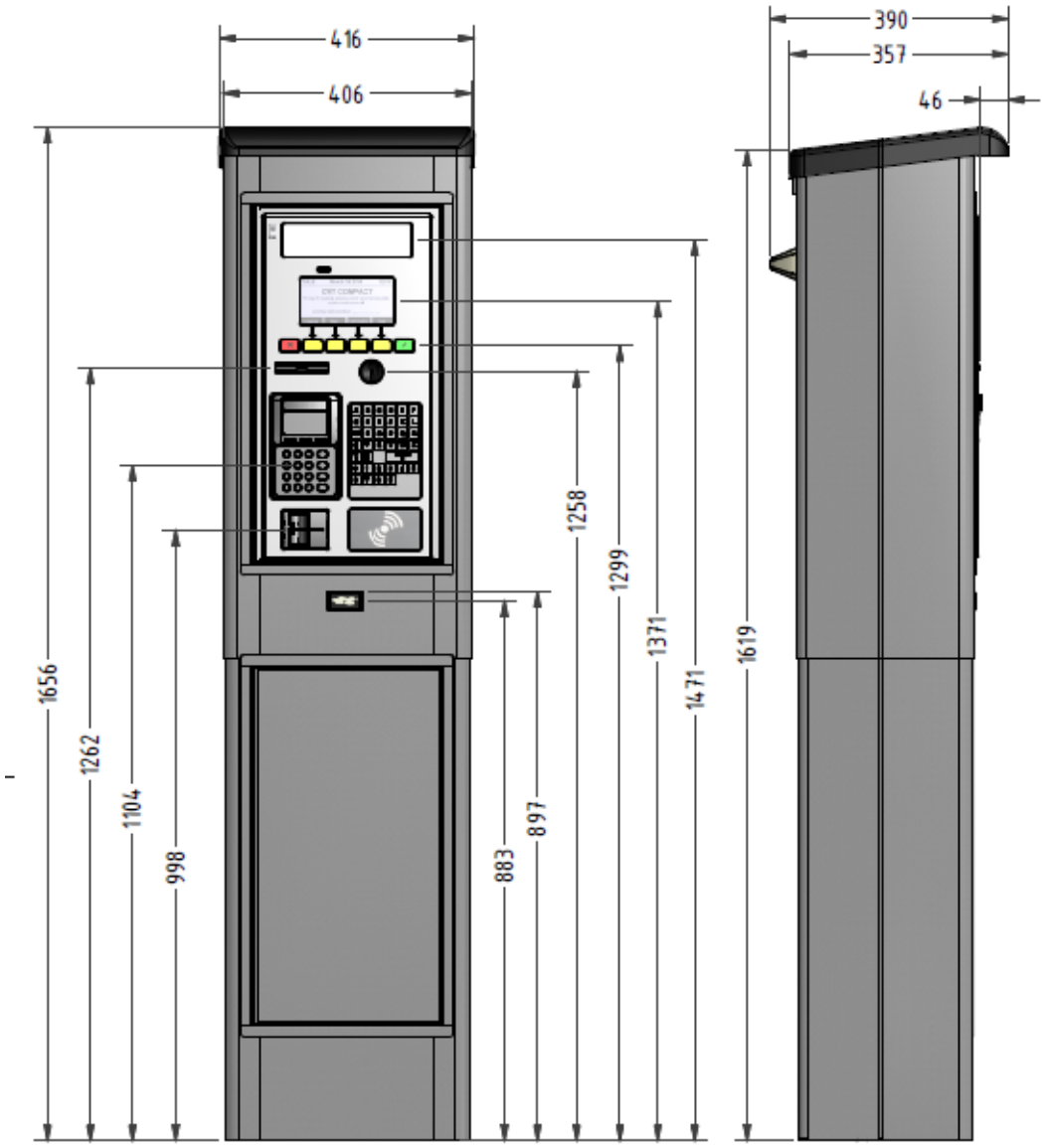

Figure 38, Terminal measurements with Xenteo

5 Installation

Flowbird strongly recommend the following conditions and settings to be considered when planning and installing solar operated CWT Compact terminals. Deviations from the guidelines will result in lower efficiency from the solar panel which may lead to operational issues depending on location, configuration, maintenance and usage frequency.

5.1 Site preparations

Before installing a terminal, you must verify that its location meets the requirements listed in the following section to secure proper operation.

5.1.1 Minimal site dimensions & Mounting holes

The given distances between fixed objects at the back and the sides of the terminal are minimum recommended distances:

- The distance behind the terminal enables easy handling while mounting the terminal and some vertical adjustment of the terminal. This distance is strongly dependent on GSM/GPRS reception and should be increased in poor situation.
- The distance at the left side ensures that the doors can be fully opened.
- The distance at the right side allows easy insertion of the door key and gives enough space if a locking mechanism needs to be repaired.

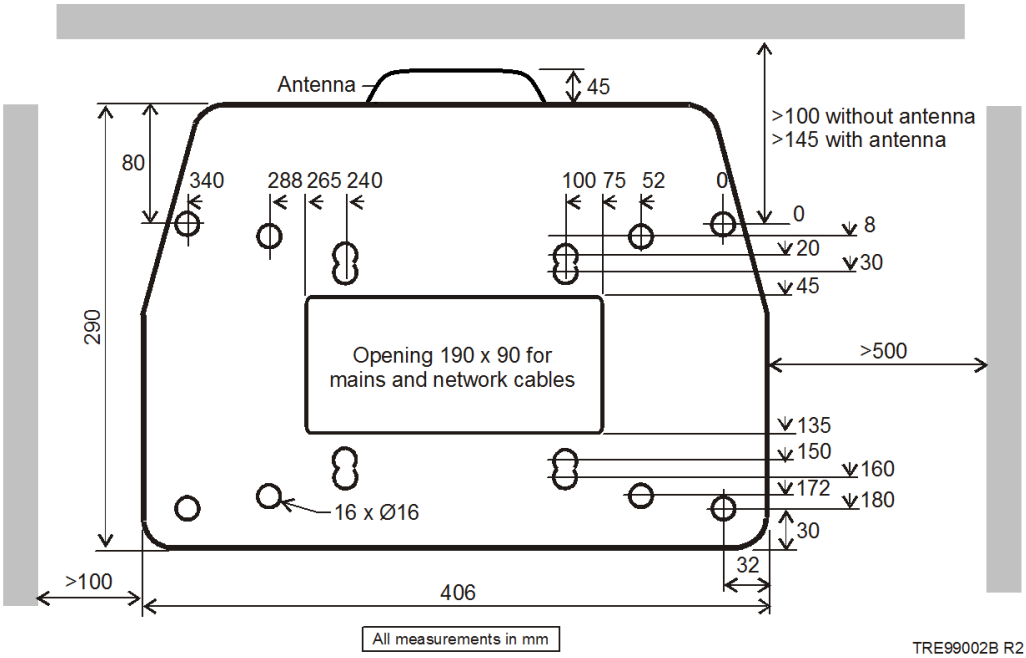

Figure 39, Terminal installation drawing

The above figure shows all the alternative mounting holes in the pedestals bottom plate. See Pouring a new concrete foundation 60 regarding placing the terminal on a base anchor cast into a foundation.

A cable for connection to the power grid is drawn through the floor (from the floor below, for example) and into the pedestal through the opening in the mounting frame (optional). Alternatively, a hole can be drilled in the pedestal and the cables drawn in some other way. The cable must be protected against damage. Use proper cable bushing to prevent cable wear and moisture entry into the pedestal.

Danger:
Follow local regulations regarding electrical installations.

5.1.2 Solar power positioning

The ideal installation of the terminal may vary due to the surroundings. A thumb rule is to have the solar panel facing south with the panel surface perpendicular towards the sun.

The drawing below illustrates how a Flowbird terminal is installed on an undefined street with obstacles (buildings) on both sides. The illustration also shows the angle where the solar panel will get the most sun during the day. Please note that the angle is also 360 degrees around the terminal. Mentioned parameters must be considered when planning an installation.

Also, note that different latitudes will give variances in optimal solar angles, which also affects the ideal positioning of the terminal.

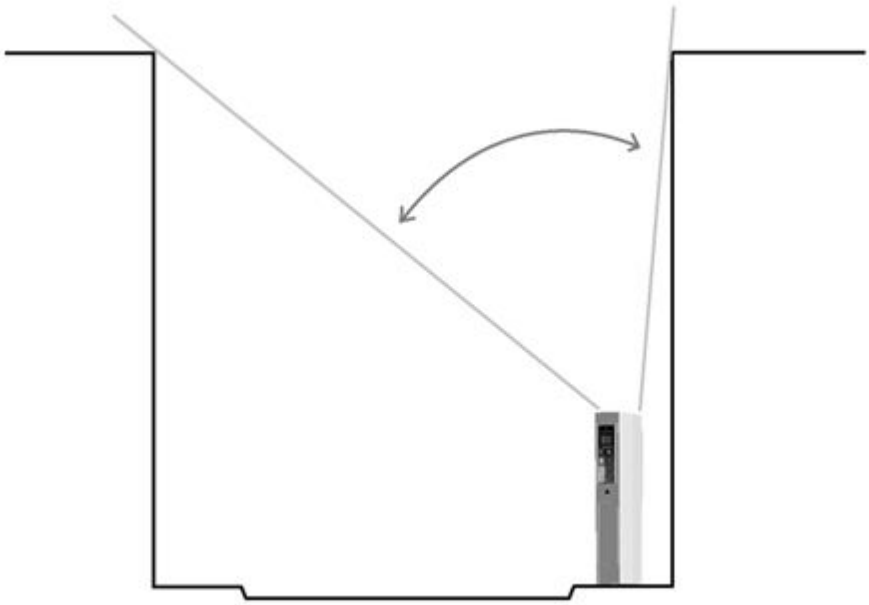

Figure 40, Solar Panel Placement.

Obstacles and shading

Even the smallest shading of the solar panel will result in substantial loss of output power. If, for example, 2% of the surface of the solar panel were to be shaded, the output efficiency would be 30% lower due to serial connection between the solar cells.

Shading can be caused by many different things, such as trees, buildings, balconies, dirt/debris, and snow. The risk of shading from buildings and other objects in the vicinity will increase during the winter due to the lower altitude of the sun.

5.1.3 Placing the terminal on an existing concrete foundation

The pedestal is attached directly to the foundation using 4–8 expansion bolts, see Figure below. The maximum bolt diameter is 12 mm.

The bottom plate extends 1.5 mm below the housing of the pedestal and you can place the pedestal directly on top of the foundation without any risk of damaging the housing.

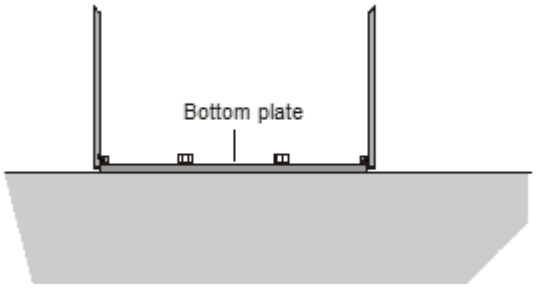

Figure 41, Terminal placed directly on the foundation

Important:
Terminals for coin payment must be properly aligned vertically because the function of the anti-pin module and the coin verifier may be interrupted if the terminal leans more than a couple of degrees in any direction.

5.1.4 Pouring a new concrete foundation

If the installation site does not have an existing concrete base or the equivalent, you can pour a concrete foundation, casting a base anchor (0403-B0122) into position. The Flowbird base anchor is supplied as a flat package containing parts to be assembled at the installation site.

Important:
Terminals for coin payment must be properly aligned vertically because the function of the anti-pin module and the coin verifier may be interrupted if the terminal leans more than a couple of degrees in any direction.

Figure 42, Base anchor 0403-B0122.

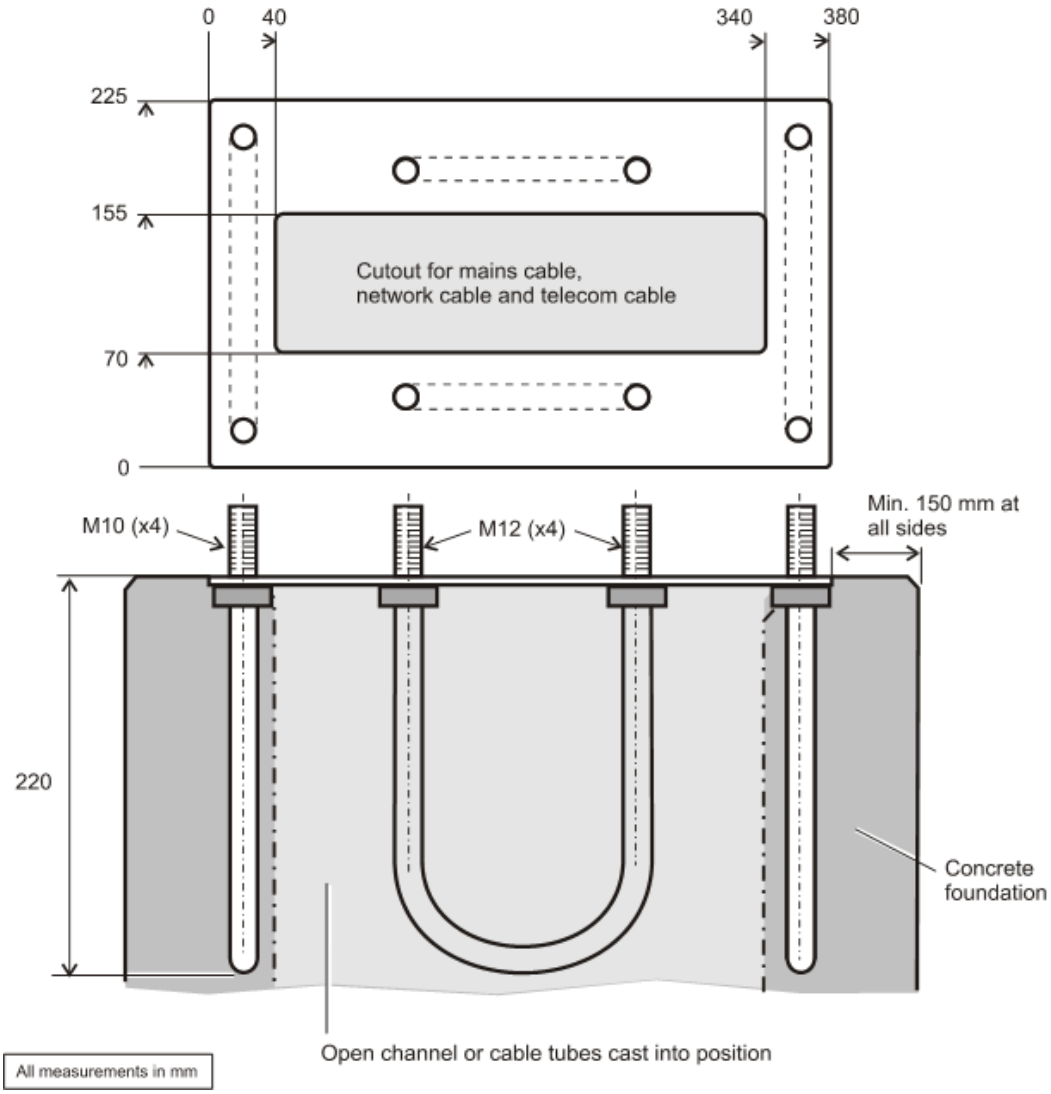

Figure 43, Foundation measurements

If the terminal should be connected to the grid power supply, a duct must be cast in the concrete foundation so that the cable can be routed in through the bottom of the pedestal. You can cast an approved type of plastic or steel pipe, according to local regulations.

Danger:
Follow local regulations regarding electrical installations.

5.1.5 Power supply

Danger:
Only qualified personnel may carry out electrical installation. Follow all local regulations.

Unless otherwise agreed, the customer is responsible for providing an appropriate 12V battery. For CWT Compact terminals connected to the grid power supply, a battery capacity of 17 Ah is required. Terminals equipped with a solar cell panel require at least 45 Ah.

The customer is responsible for installing cables for terminals that will use the grid power supply. When delivered, terminals are ready to be connected to the power supply used at the installation site. It is up to the customer to ensure that the correct type of battery charger and fuses are used.

Note:
The maximum total power consumption depends on the configuration of the terminal.

5.2 Installing the terminal

Due to its heavy weight the terminal is usually transported in two pieces to the installation site where the pedestal is secured to a concrete base or floor before the cabinet is mounted on top of the pedestal.

Provided there is an appropriate lifting device or a hand cart at hand, the entire terminal can be installed as a complete unit.

5.2.1 Mounting the pedestal in its foundation

WARNING:
Lifting the pedestal, the cabinet, or the complete terminal, requires two or three persons due to the heavy weights.

WARNING:
Before the terminal has been secured to the foundation, there is a risk of the terminal tipping forward, especially when you open the cabinet door.

- Place the terminal at the site that has been prepared. see Site preparations 58 for instructions.

- Fasten the terminal with 4–8 expansion screws or mount the terminal on an existing base anchor or similar using the appropriate nuts and washers.

Important:
The function of the coin system and the water drainage (door shelf) may be interrupted if the terminal leans more than a couple of degrees in any direction.

5.2.2 Mounting the cabinet on top of the pedestal

- Remove the 4 screws fixing the protective plate at the top of the pedestal. The screws will be used to secure the cabinet onto the pedestal.
- Carefully place the cabinet on top of the pedestal.
- Secure the cabinet to the pedestal with the four screws as mentioned above.
- Thread the unconnected cables up into the cabinet or down into the pedestal.

5.2.3 Installing the battery

Place the battery on the floor in the bottom of the pedestal.

Important:
The RED coloured lead must be attached to the PLUS pole on the battery. Connecting with wrong polarity will blow one or more fuses on the CPU board and will result in unrepairable damages to the Main board.

in a mains-powered terminal

Connect the battery to the 12 V distribution panel on the battery charger to the connector marked

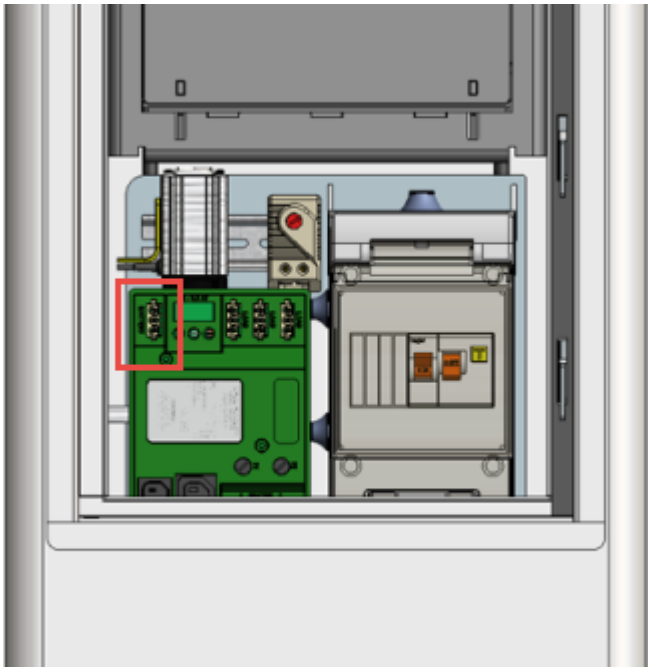

Figure 44, Connection of battery to 12V distribution panel

[in a solar or battery-only powered terminal]

Connect the 12 V supply cable from connectors J5 and J14 on the CPU board to the battery.

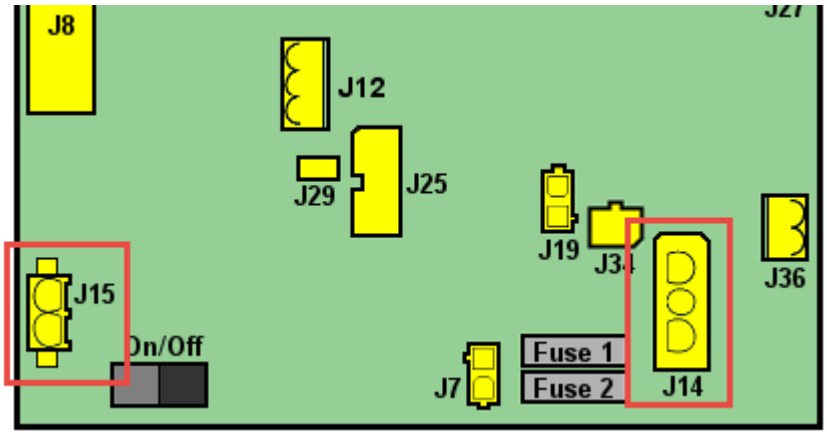

5.2.4 Connecting to the mains power grid

Connect the incoming power cable to the terminal block (automatic residual current device or fuse socket) in the pedestal (design may vary due to customer requirements). See Installing the battery 63.

Secure the cable using the strain relieving clamp. See Figure below.

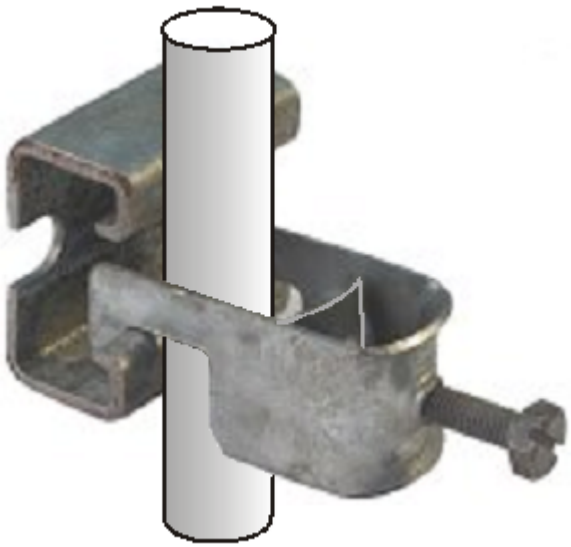

Figure 45, Power cable strain relieving clamp

5.2.5 Installing a modem

The end customer is entirely responsible for the set up and function of the modem communication unless otherwise is agreed upon in writing with the Flowbird representative.

CPU Board 0501-E0150 Rev F and later come with a pre-installed 3G modem on the main board

After installation check the connection as described in Checking modem contact with network provider 67

Parts needed

The 3G modem is integrated on the main board. To be able to use the modem the following parts are needed:

- SIM-card with subscription to data communication service.
- Flowbird antenna 0040-07115 GSM/GPRS/3G antenna.
- Self-adhesive label with subscription telephone number / SIM card number.
- Self-adhesive Cable camps.

Installing the SIM card

1. Open the SIM card holder (1) and insert the SIM card with the card's cut-off corner positioned as shown in Figure below.
2. Close the SIM card holder.

3. Write the subscription telephone number / SIM card number on the label and attach the label, fully legible, inside the cabinet, not on the modem itself because it might be necessary to replace the modem some time.

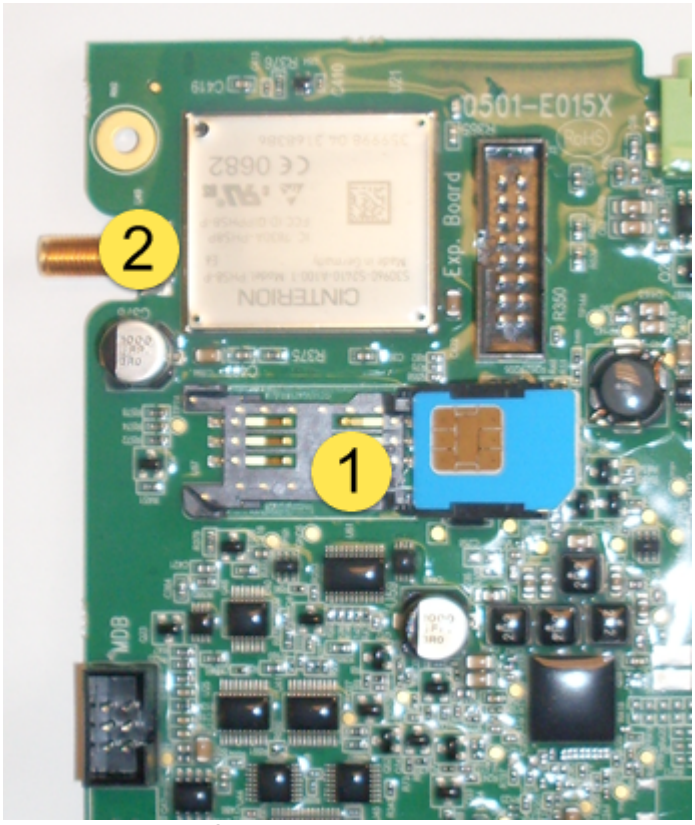

Figure 46, SIM card holder in opened position

Installing the external antenna

Flowbird antenna part nr: 0040-07115

In the back of the CWT Compact there is a prepared hole. The hole is positioned according to the figure below:

Figure 47, Antenna mpunting hole in a CWT Compact

1. Put the antenna in the hole and fasten it with a bolt.
2. Connect the cable to Connector 2 in the image above.

5.2.5.1 Checking modem contact with network provider

To check the connection:

1. Switch ON the terminal.
2. Check the LED status indicators on the modem.

LED Status indicator

Figure 48, location of the LED status indicator

The LED indicator is located next to the upper right corner of the Modem processor.

RED Registered in the GSM network. Should always be ON.

YELLOW Connected to the GPRS network. Should always be ON.

GREEN Connected to GPRS network and ready to communicate with the WebOffice gateway.

The LED will be turned off when the modem it powered off. If no LED is lit and the modem is powered on the SIM is not valid or an incorrect PIN code has been entered in the terminal configuration.

Blinking pattern

10 ms on / 1990 ms off Modem has an active PPP-connection (GPRS and UMTS) and is ready to communicate.

10 ms on / 3990 ms off Modem registered to a network. No call, no data transfer active.

500ms on / 500 ms off Limited Network Service (e.g. because no SIM, no PIN or during network search)

5.2.6 Loading paper in a GeBe printer

Note:
The maximum diameter of the paper role is 200 mm

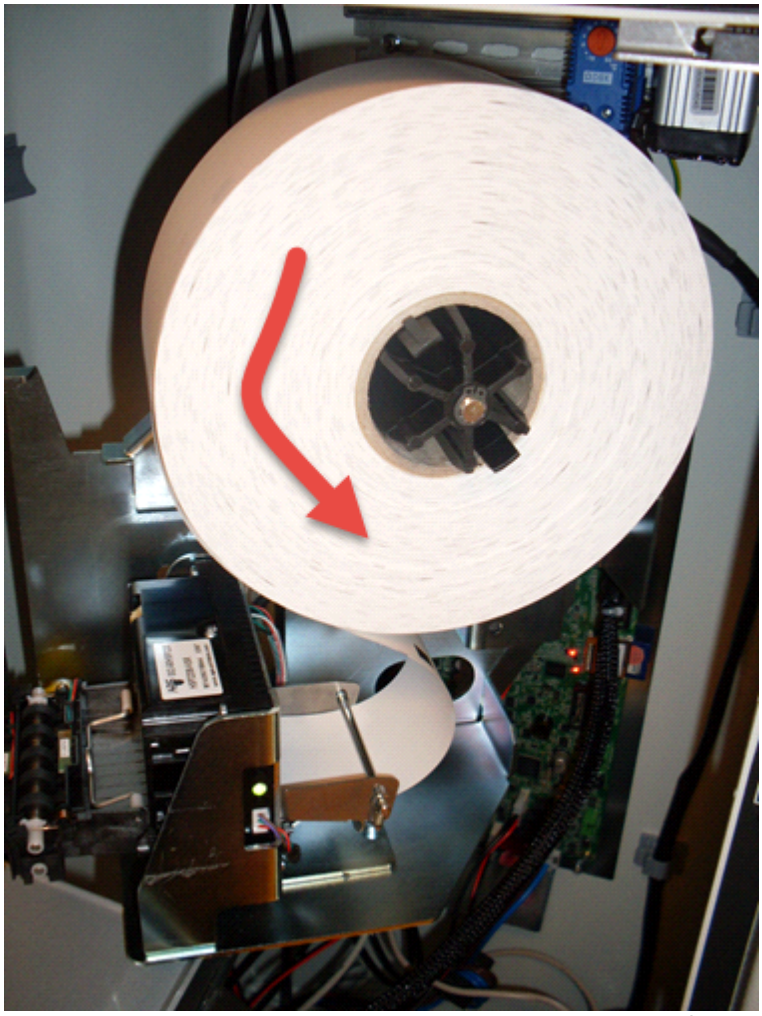

Figure 49, Paper roll mounted on a version 2 printer shelf

1. Remove about 0.7 m of the paper from a new roll to ensure there is no glue residue left.
2. Swivel the printer module by pulling the locking hatch while moving the module to the right.
3. Orient the roll so the paper leaves the roll from the front and downwards. The temperature-sensitive layer should face toward the front of the terminal.
4. Put the roll onto the roll hub. Make sure the role clicks in place to prevent it dropping off during operation
5. Let the terminal boot up in service mode (leaving the upper door open and bottom door closed).

Note:
The printer and paper role shelf may differ from model to model.

5.2.7 Installing the coin box

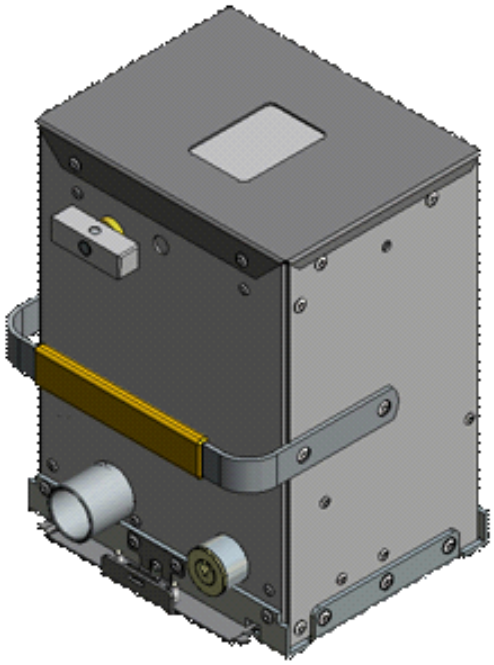

Figure 50, Coin box

1. Open the vault door with the appropriate key.
2. Insert the coin box
3. Turn the opening knob a quarter turn counter clockwise into vertical position. This will lock the box into position in the pedestal and open the collection hatch on top of the box.

Important
if the knob is now returned to the horizontal position, the box must be emptied before the knob can be returned to the correct position. The vault door cannot be closed while the knob is in the horizontal position.

4. Close the vault door and lock it.

5.3 Program loading

Usually, a CWT Compact terminal comes complete with the appropriate application software and settings.

The CWT application software itself is subject to continuous improvements which means that all CWT terminals will benefit from being updated now and then.

It may also be necessary to update AVR firmwares when the CWT application and Operating System (OS) have been updated, see more in the CWT Software Configuration Handbook.

Finally, it might be that the operating system (Windows CE or EC7) needs to be updated.

5.4 Changing the settings of the terminal

Sometimes, a terminal's application software settings need to be adapted to meet new functional requirements. There are some alternative ways to change software parameters, etc. See the CWT Software Configuration Handbook.

6 Daily operation

Depending on the configuration some actions must be performed one regular base

- Changing and emptying the coin box 70
- Paper refill 71

Next to these actions, you must perform regular preventive to prevent doing corrective maintenance.

- Preventive maintenance 71 describe the action to keep the terminal in good shape.
- Corrective maintenance 82 describes the repair and replacement of part you can fix yourself

Depending on your configuration the CWT software must be updated to e.g. implement new tariffs or implement new features.

Most of these actions can be done using the WebOffice application

- changing the CWT Compact software and firmware 98

6.1 Changing and emptying the coin box

To empty the coin box, follow the 3 steps described below

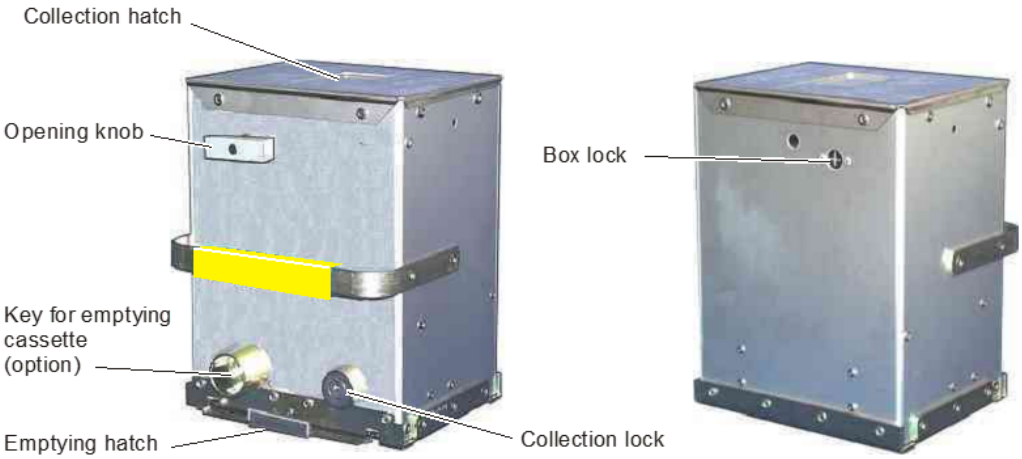

Removing the coin box

1. Open the vault door with the appropriate key.
2. Turn the opening knob clockwise to the horizontal position. This closes the collection hatch and releases a catch that holds the box in position in the vault.
3. Pull the coin box out. A collection ticket will be printed.

Warning:
The coin box may be heavy depending on the amount of coins in it

Emptying the coin box

1. Turn the collection lock clockwise with the appropriate key. The same key combination is usually used for all coin boxes.
2. Pull the emptying hatch out completely. This will empty the box of its contents and activate the internal mechanism.
3. Push the emptying hatch in. The hatch can be pushed back in only if it has previously been pulled out completely.
4. Turn the collection lock counter clockwise and remove the key.

Inserting the coin box

1. Insert an empty coin box.
2. Turn the opening knob counter clockwise to its vertical position. This locks the box into position in the vault and opens the collection hatch.

Important:
If the knob is accidentally turned to the horizontal position at this point, the box must be emptied as described in section 2 above before the knob can be returned to the correct position.

3. Close the vault door. The opening knob must be in the vertical position for the door to be closed.

6.2 Paper refill

Raise the print head and remove the remaining paper, if any.

Install new paper roll as described in section Loading paper in a GeBe printer 67.

7 Preventive maintenance

This chapter primarily describes preventive maintenance activities. How often these activities need to be carried out depends, to a large extent, on the conditions of the area where the ticket terminals have been installed. The thermal

head, for instance, must be cleaned more frequently if the surrounding air contains a high concentration of diesel exhaust fumes.

Note:
Spare part numbers can be found on the exploded view drawings of each models.

7.1 Batteries

Battery levels

The CWT C can send battery measurements of the battery voltage to WebOffice for monitoring.

The CWT will send the battery voltage measured during regular intervals to WebOffice

The warning and error levels can be set but are default set to:

- Warning = 11.9 V
- Error = 11.5 V

When the CWT has sent a warning; e.g. due to a power down; the terminal will send a recovery event to WebOffice when the battery is charged to its normal level again.

If a Warning is sent and no recovery event is sent within a day, it may be time to change the battery

Note:
The gel type, lead-acid battery supplied by Flowbird is maintenance free but will wear out over time.
Verify on a regular base if the contacts are not corroded. If so the battery and the cable should be replaced as soon as possible.

Mains-powered terminal

The battery needs replacement if the yellow light on the charger on a mains-powered terminal remains lit even after a longer charging time.

Lead accumulators

Follow normal procedures for the handling of lead accumulators. Instructions are usually available from the battery supplier.

Follow local regulations for the disposal of replaced batteries. Used batteries should be returned for recycling if required according to local laws and regulations.

Note:
The gel type, lead-acid battery supplied by Flowbird is maintenance free. Verify on a regular base if the contacts are not corroded. If so the battery and the cable should be replaced as soon as possible.

Battery on CPU board

In some cases, the back-up batteries on the CPU boards are causing malfunctions (real-time clock instability, memory loss). This is caused by bad contact between the contact springs of the battery holder and the coin cell battery.

Caution:
It is very important that the battery is of an approved brand (Duracell, Eveready, Panasonic, Ray-O-Vac, Sanyo, Varta, Toshiba, Seiko or another major battery manufacturer) and that it is kept clean. Oils from fingers (i.e. fingerprints) may together with humidity and time cause problems. Such dirt may just as well be deposited on the underside of the positive contact spring, if a dirty battery has been mounted in the holder.

As the holder is made from a material impervious to most industrial solvents, you may use almost any cleaning solvent at hand (isopropyl alcohol is recommended). Flowbird recommends wearing cotton or latex gloves when replacing batteries in order to prevent fingerprints on the battery surfaces. It is also recommended to inspect the positive spring contact to establish that it has not been bent upwards to such an extent that the pushing force has been affected, even as it is made out of spring steel.

To prevent excessive bending of the positive contact spring, Flowbird recommends using of a pair of plastic (or otherwise insulated) pliers when mounting new batteries. The coin cell should be pushed in such that the cell is in contact with the plastic housing of the battery holder, not bending the positive contact spring upwards more than necessary.

The CPU board contains a lithium battery (button cell) that should be returned for recycling if required according to local laws and regulations. The battery (CR2032, 3 V, 210 mAh, 20 mm diameter) supplies backup voltage to the real-time clock in case of interrupted power supply from the 12 V batteries.

Important:
To ensure uninterrupted terminal operation; replace the battery every 5 years.

Warning:
Lithium batteries can be dangerous because they can explode if short-circuited. Handle batteries in accordance with local laws and regulations.

7.2 Zebra printer

7.2.1 Cleaning

Visible paper dust should be blown off regularly (at least once per year), especially from the black mark and paper-out opto-sensors.

CAUTION ! – Deposits accumulating on the row of heating points on the print head will negatively affect the thermal head's cooling which might damage or destroy the print head.

The print head must be cleaned regularly. The frequency of cleaning depends on factors such as paper quality, the type of pre-printing on the tickets, and the degree of air pollution.

1. Remove the presenter rolls assembly (see Front pressure rollers replacement).
2. Remove the presenter table (see Presenter table replacement).
3. Remove the cutting blade (see Cutting blade replacement). Take care because the blade may be greasy!

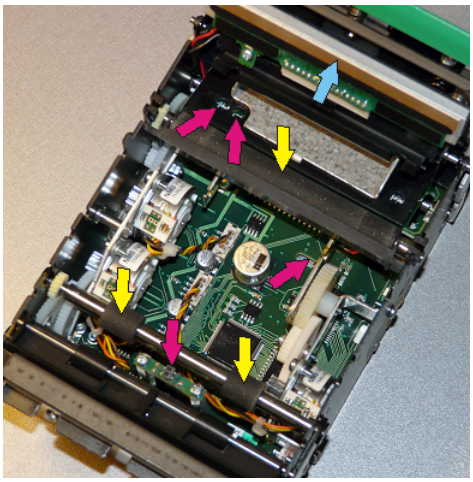

4. Use an air blower to get rid of dirt and small paper particles inside the printer.
5. Check that the presenter sensor, the black mark/paper out sensor, and the cutter home sensor is clean (marked with red arrows in Figure 54).
6. Moisten a lint free piece of cloth (non-woven textile is recommended) or a piece of paper with platen cleaner solvent usually available on the market.
7. Wipe off the presenter feed rolls and the platen (see yellow arrows in Figure 54) while rotating them. Ensure that there are no paper particles left.
8. Wipe off the row of heating points (blue arrow in Figure 54) on the print head using isopropyl alcohol.

9. Assemble removed parts as described in sections 8.2.4, 8.2.6 and 8.2.7.
10. Check that the document exit shutter is in the correct position before reinstalling the printer.

7.2.2 Testing

1. With paper loaded, press the Feed button just after closing the print head. This produces a self test printout.
2. The printer exits self test mode and goes on-line.

7.3 GeBe Printer GTP4672

7.3.1 Print head

The print head and the black mark sensor can be access by dismounting the printer from its casing when installed on the printer shelf version 1.

Figure 51, Mounting screws on printer shelf version 1

Remove the 4 screws from the top front of the printer and the bottom back of the casing

Pull the metal lever to release the Ticket Presenter

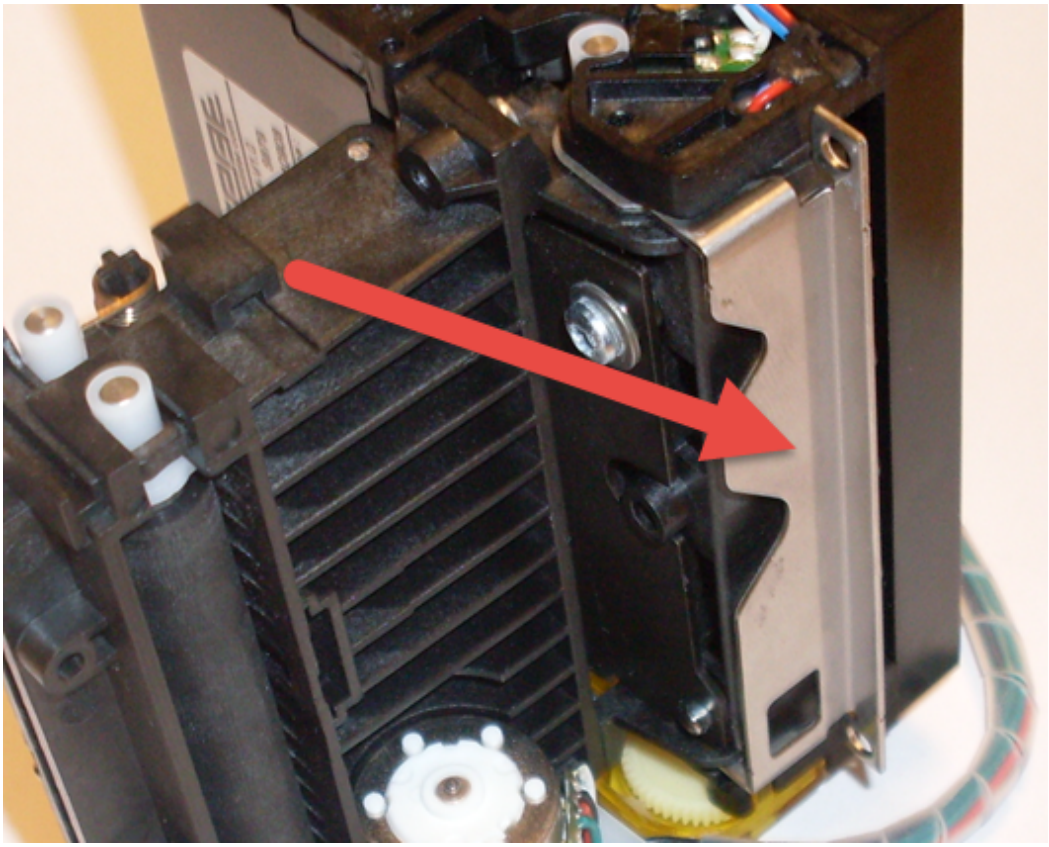

52, Release lever

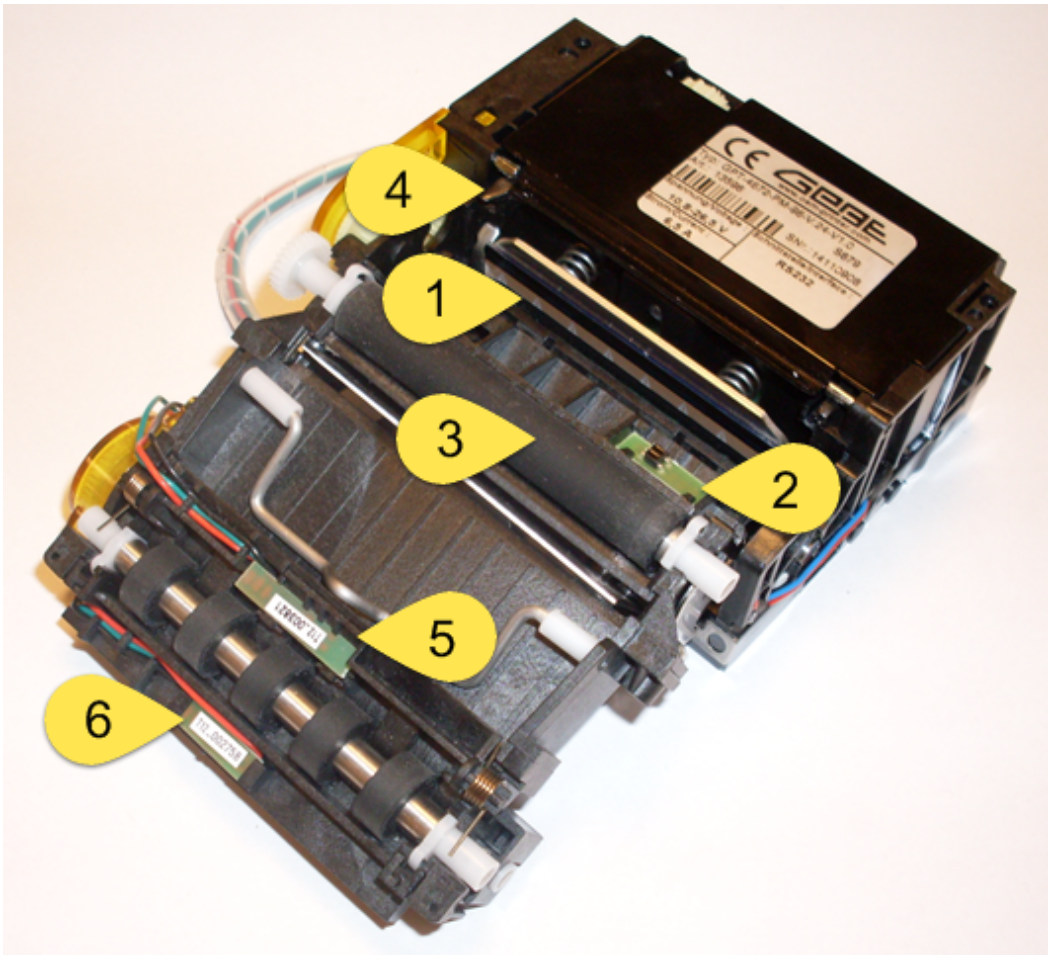

53, Printer in opened state

1. Print head
2. Black mark sensor
3. Pressure roll
4. Cutting knife
5. Presenter sensor
6. Document exit sensor

The print head consists of a ceramic plate with a large number of heated points positioned in a line perpendicular to the feed direction of the paper. When a point is heated, it warms the heat-sensitive top layer of the paper to a temperature above 70 °C which develops a black or blue dot (depends on the type of paper used).

Print speed, number of burn pulses and burn time can be adjusted for optimal print result. See *CWT Software Configuration Handbook*.

7.3.2 Cleaning

Visible paper dust should be blown off regularly (at least once per year), especially from the black mark and paper-out opto-sensors.

Caution:
Deposits accumulating on the row of heating points on the print head will negatively affect the thermal head's cooling which might damage or destroy the print head.

The transportation rolls must be cleaned regularly. The frequency of cleaning depends on factors such as paper quality, the type of pre-printing on the tickets, and the degree of air pollution.

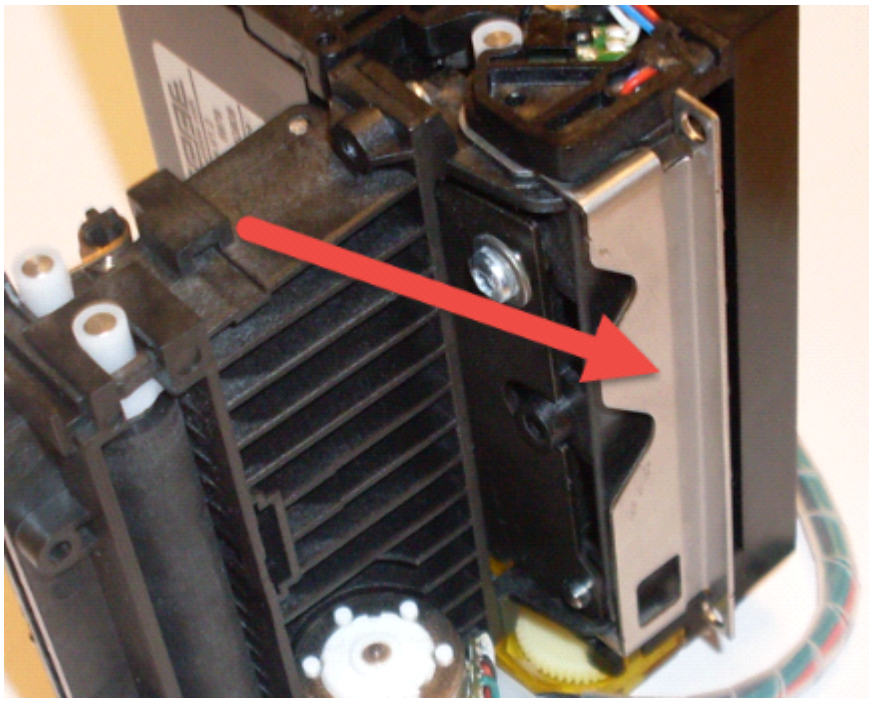

1. Pull the metal lever to release the Ticket Presenter
2. Moisten a lint free piece of cloth (non-woven textile is recommended) or a piece of paper with platen cleaner solvent usually available on the market.
3. Wipe off the presenter feed rolls A and B

To clean the printer, disconnect and dismount the printer from the module and from its casing. Open the printer using the leaver on the bottom of the printer. See Print head 75 for detailed figures

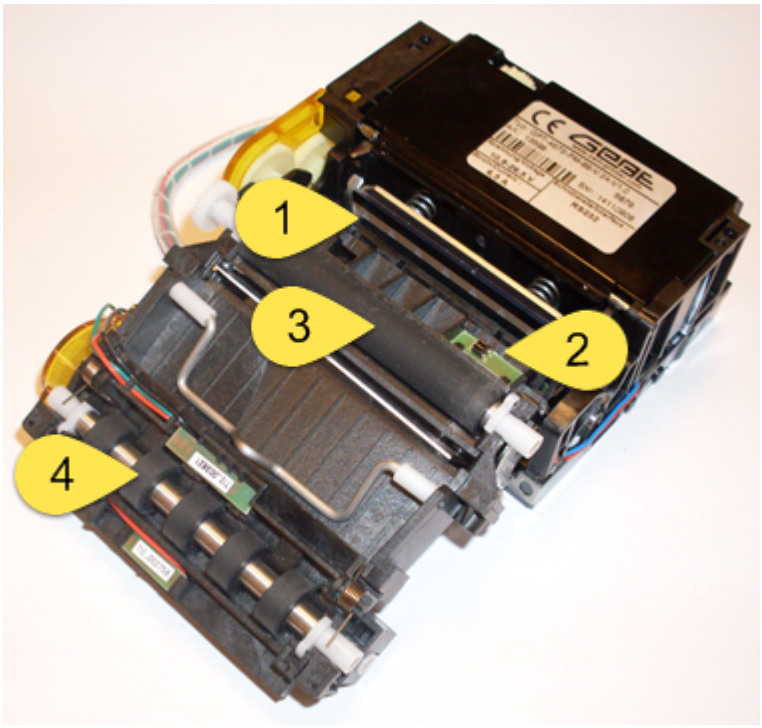

54, Cleaning points inside the printer

4. Use an air blower to remove dirt and small paper particles inside the printer.
5. Check that the black mark/paper out (2) sensor is clean.
6. Moisten a lint free piece of cloth (non-woven textile is recommended) or a piece of paper with platen cleaner solvent usually available on the market.
7. Wipe off the presenter feed rolls (3 and 4) while rotating them. Ensure that there are no paper particles left.
8. Wipe off the row of heating points (1) on the print head using isopropyl alcohol.
9. Re-mount the printer in its casing and on the mounting plate.

7.3.3 Testing

1. With paper loaded, press the Feed button immediately after closing the print head. This produces a self-test printout.
2. The printer exits self-test mode and goes on-line.

7.4 Coin handling unit

Cleaning

Get into the habit of regularly checking (once or twice per year) for foreign matter in the various parts of the coin unit.

Important:
Use isopropyl alcohol for cleaning. If another solvent is required, test it first to make sure it does not cause any damage.

Testing

The function of the coin unit should be checked regularly, for instance when refilling the ticket paper. Select Utilities / Test purchase mode in the service menu and make test purchases with all the applicable coin types.

7.5 Card readers

7.5.1 Chip-card reader

Cleaning

The magstripe read head and the Chip reader sensor in this device needs regular cleaning using commercially available cleaning cards for Chip card readers.

Testing

Test the function of the card reader regularly by making test purchases with a Flowbird test card.

7.5.2 Hybrid card reader

Cleaning

The magstripe read head in this device needs regular cleaning using commercially available cleaning cards for magstripe card readers.

Testing

Test the function of the card reader regularly by making test purchases with a Flowbird test card.

7.6 Display module

This section is about cleaning of the outmost surface of the display modules. Cleaning the polycarbonate plastic display window in the cabinet door is described in section Cabinet door display window, cleaning 81.

Caution:
Do not apply excessive force to the display surface or the adjoining areas since this may cause the colour tone to vary. Don't touch, push or rub the exposed polarizer covering the display surface of the LCD module with anything harder than an HB pencil lead. The polarizer is soft and easily scratched. Handle it carefully. Don't put or attach anything on the display area to avoid marks.

If the display surface is contaminated or dusty, gently wipe it with a soft dry cloth. To avoid damaging the surface do not scrub hard. If still not completely clear, moisten a cloth with isopropyl alcohol or ethyl alcohol.

Solvents other than those mentioned above may damage the polarizer. Especially, do not use water, ketones such as acetone, or aromatic solvents.

Immediately wipe off any drops of adhesives like saliva and water from the display surface. They might otherwise cause panel surface variations and color change.

7.7 Cabinet door display window

Clean the outside using a very soft cloth such as the type used for cleaning glasses. Moisten with mild cleaning detergent solution. The rear side of the window is more sensitive than the outside and should be cleaned with great care.

Important:
Do not forget to clean the glass in front of the warning/error indicator and the ambient light sensor. If the light sensor is obstructed, this can increase the power consumption of the terminal.

7.8 Cabinet

Cleaning

Clean the exterior of the metal cabinet surfaces using petroleum spirits (white spirit) or a mild cleaning solution.

- See Section Cabinet door display window, cleaning 81, regarding cleaning of the display window in the cabinet door.
- See Section Solar panel, cleaning 82, regarding cleaning of the solar panel.

Lubrication

Lubricate the lock cylinders with *Kaba-Clean spray* or an equivalent lubricant. The autumn is a good time to do this.

Check the friction in the hinge pins of the doors. Lubricate if necessary with a lubricant such as Moebius 8200.

Caution:
Thin lubricants such as CRC 556 must not be used.

7.9 Solar panel

cleaning

High efficiency of the solar panel requires that the panel is cleaned free from foreign objects such as dust, sand, leaves, excrements from birds, snow, ice, etc.

Regular checking of the solar panel is recommended.

When cleaning the panel, first remove dust and other lose particles by blowing or using a soft brush. If necessary, clean the panel using a soft cloth moistened with a mild detergent solution

Note:
When removing snow or ice, do not use metal objects because they can scratch the panel surface which reduces the panel's efficiency. A plastic ice scrape is recommended.

8 Corrective maintenance

Caution:
The terminal must be switched OFF when you disconnect or connect cables inside the terminal. An exception is USB cables and USB devices that can be connected and disconnected without switching OFF the terminal.

In this chapter:

- Lead battery replacement 83
- Printer replacement 83
- Coin unit replacement 89
- Coin verifier replacement 91
- Card reader replacement 91
-
- Keyboard replacement
- Cabinet & pedestal 94
- CPU board lithium cell replacement 83

8.1 Lead battery replacement

For replacement of the on-board battery see Batteries 72

Replacing the battery

To replace the battery, follow the steps below:

1. Shut down the external power supply if any.
2. Lift out the battery from the pedestal. Be careful to not short-cut the contacts.
3. Unscrew the cable.
4. Connect the cable to the new battery. Make sure the red wire is connected to the [+] pole
5. Place the new battery in the pedestal
6. reconnect the external power

8.2 CPU board lithium cell replacement

Warning:
Lithium batteries can be dangerous because they can explode if short-circuited. Handle batteries according to local laws and regulations.

Removal

Carefully lift the battery holder tongue a little when you remove the battery cell.

Warning:
Avoid using conductive objects due to the risk of short circuiting the battery.

Assembly

Install in reverse order.

8.3 Printer replacement

Gebe GTP4672 replacement

8.3.1 Zebra printer

To make it easier to conduct maintenance on the printer remove the printer from the terminal.

8.3.1.1 PRINT HEAD, CLEANING

If the print quality is poor, for example if there are longitudinal white lines in printed parts, clean as described in Cleaning 78.

8.3.1.2 PRINTER PLATEN AND FEED ROLLERS, CLEANING

Usually, paper feed problems depend on the fact that paper dust and other dirt has gathered on the platen or the feed rollers. Clean as described in Cleaning 78.

8.3.1.3 PAPER JAM CLEARING

The area most prone to causing paper jam is the area around the platen and the cutting blade.

Removing the platen, and especially replacing it, requires that you remove the front presenter roller assembly and the presenter table as described in Sections FRONT PRESSURE ROLLERS REPLACEMENT 84 and PRESENTER TABLE REPLACEMENT 85.

8.3.1.4 FRONT PRESSURE ROLLERS REPLACEMENT

Removal

Be careful not to break the plastic tongue pressing at the centre of the shaft. Carefully release one end of the roller shaft at a time straight upward and remove the roller shaft assembly.

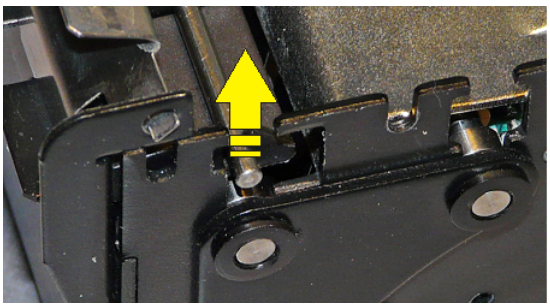

Assembly

Install in reverse order. Keep the assembly pressed down while tightening the screws.

DO NOT PRESS ON THE ROLLERS OR THE ROLLER SHAFT!

8.3.1.5 REAR PRESSURE ROLLERS REPLACEMENT

removal

Loosen the four screws (Torx 8) indicated below and remove the roller assembly.

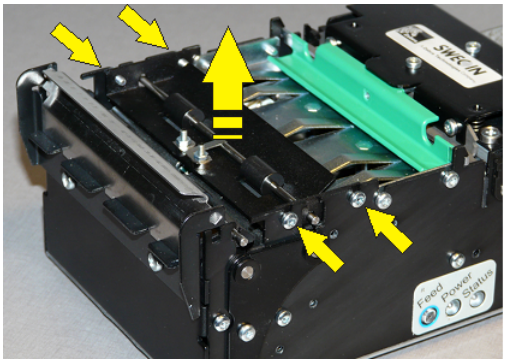

Assembly

Install in reverse order. Keep the assembly pressed down while tightening the screws.

DO NOT PRESS ON THE ROLLERS OR THE ROLLER SHAFT!

8.3.1.6 PRESENTER TABLE REPLACEMENT

removal

1. Remove the rear pressure rollers assembly (see Rear pressure rollers replacement).
2. Loosen the four indicated screws (Torx 8) and pull the table straight up.

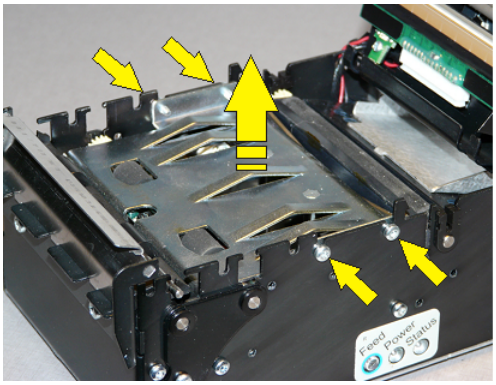

Assembly

Install in reverse order. Keep the assembly pressed down while tightening the screws.

8.3.1.7 CUTTING BLADE REPLACEMENT

removal

1. Remove the presenter rolls assembly (see Front pressure rollers replacement).
2. Remove the presenter table (see Presenter table replacement)
3. Rotate the cogwheel manually (see white arrow) until the cutter blade reaches its top position.
4. Lean the blade slightly towards you and lift it out of the cutter linkage.

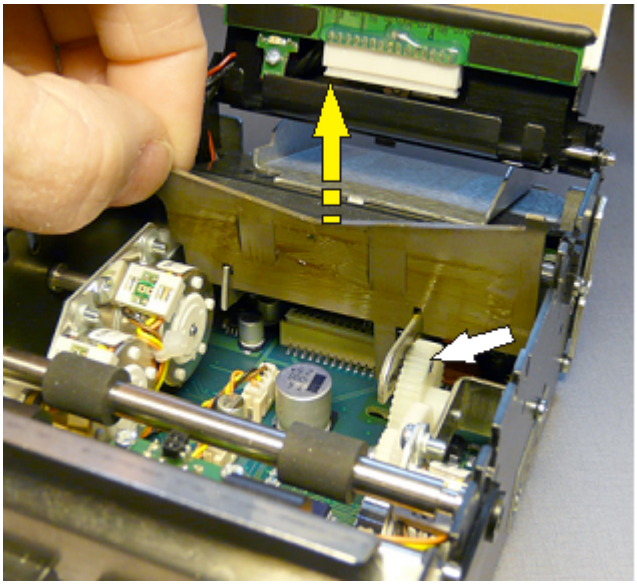

Assembly

1. Check that the cutter linkage remains in its upper position.
2. Fit the blade in the slots of the cutter linkage.
3. Gently push the blade rearward and turn the cogwheel to lower the blade to its bottom position. Make sure that the tab at the bottom of the blade enters the cut out in the integrated circuit board (see white arrows). This tab actuates an opto sensor fitted at the underside of the board.

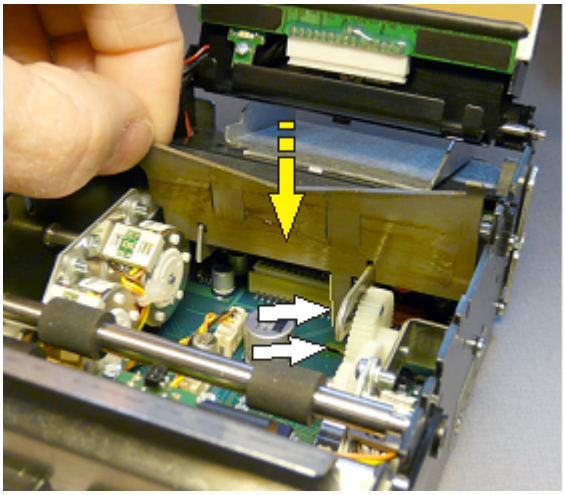

8.3.1.8 PRINT HEAD REPLACEMENT

Removal

1. Remove the two screws holding the print head. Take care of the collar-shaped hub under the right-hand screw.

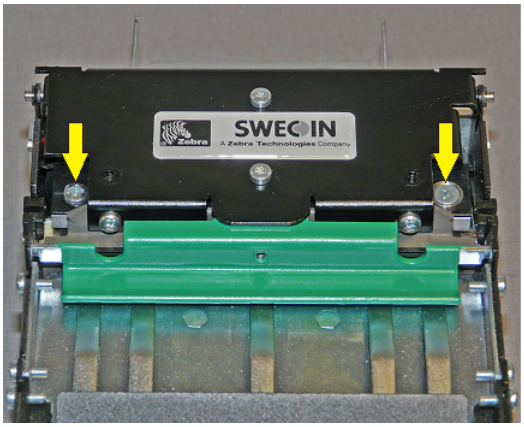

2. Use a thin bladed flat screwdriver to pry the connector out from the socket. Remove the print head.

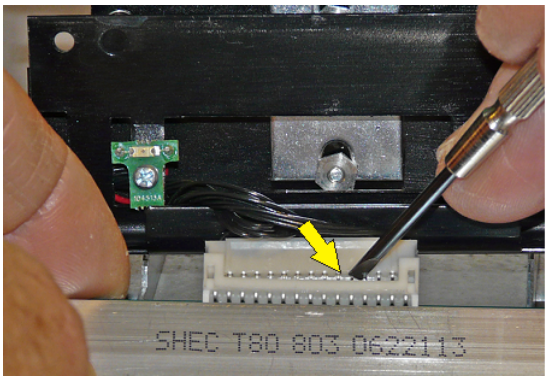

Never pull by the thin cable leads to loosen the connector because this will damage the leads.

Assembly

Install in reverse order. Keep the print head pressed down while you tighten the screws.

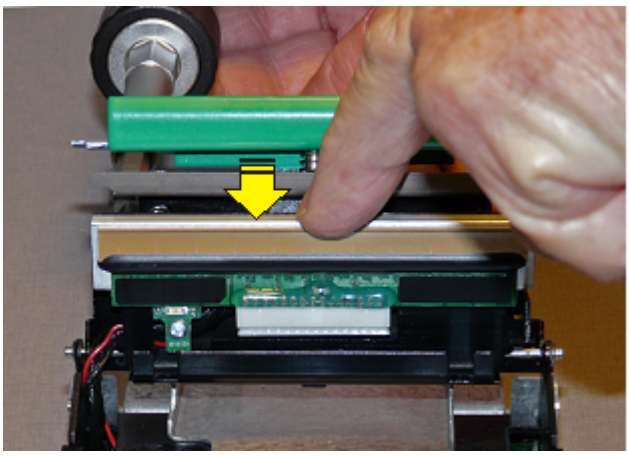

8.3.1.9 PLATEN REPLACEMENT

Removal

1. Remove the presenter table (see PRESENTER TABLE REPLACEMENT 85)

2. Press one of the fork-shaped plastic bearings together with your fingertips while lifting it up a little.

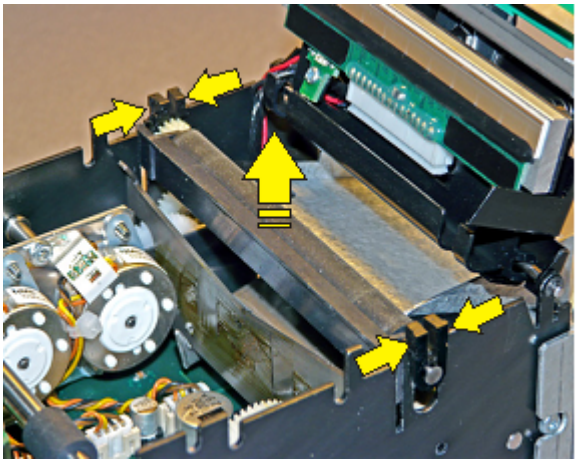

3. Lift the bearing at the opposite side up a little in the same way.
4. Remove the platen assembly with the plastic scrape.

Assembly

Install in reverse order. Be careful to orient the bearings as shown below.

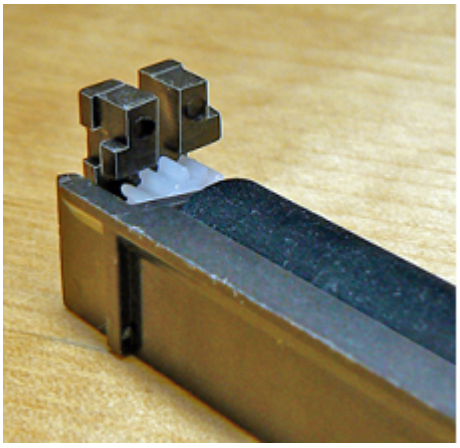

8.3.1.10 FEED ROLLERS REPLACEMENT

Removal

1. Remove the front and rear support roller assemblies and the presenter table.
2. Remove the screw (see arrow in Figure below) holding the feed roller shaft bearing plate on the right side of the printer. This lets you remove the rear feed roller assembly. Removing the front feed roller assembly requires that you remove the corresponding plate on the left side as well.

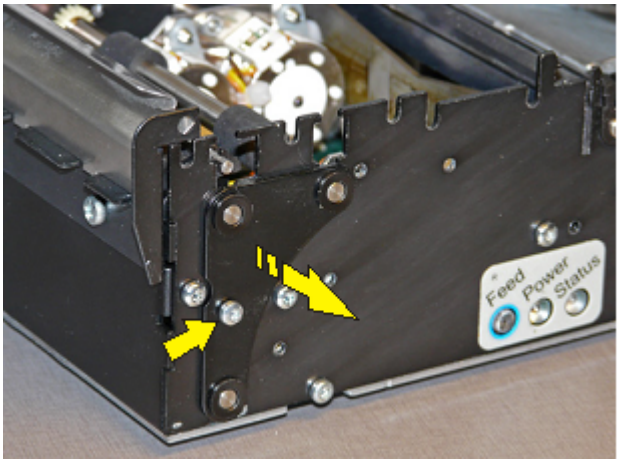

Assembly

Install in reverse order

8.3.2 Gebe GTP4672

No specific actions needed

See Printer mounting 37 for instruction how to dismount and mount the printer

- Remove any paper left in the printer
- disconnect all the cables
- unlock and lift of the printer shelf
- dismount the printer from its shell
- replace the new printer in reversed order

8.4 Coin unit replacement

Removal

1. Disconnect all cables from the coin unit. The number of cables depends on the terminal model and configuration.
2. Loosen the two screw nuts, one at the top right side and one at the bottom of the left side as shown below.
3. Keep the locking latch pulled (see arrow) while you lift and remove the coin unit. Ensure that the black plastic coin slot insert in the door does not fall out.

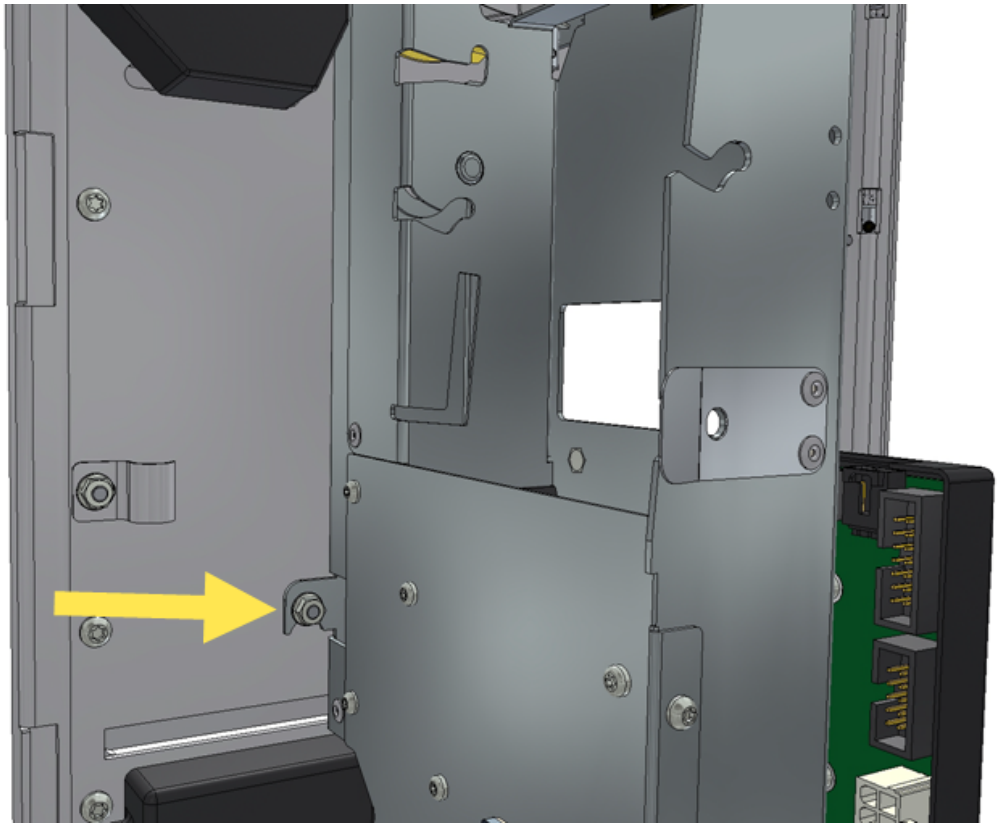

Figure 55, Removing the coin unit Assembly

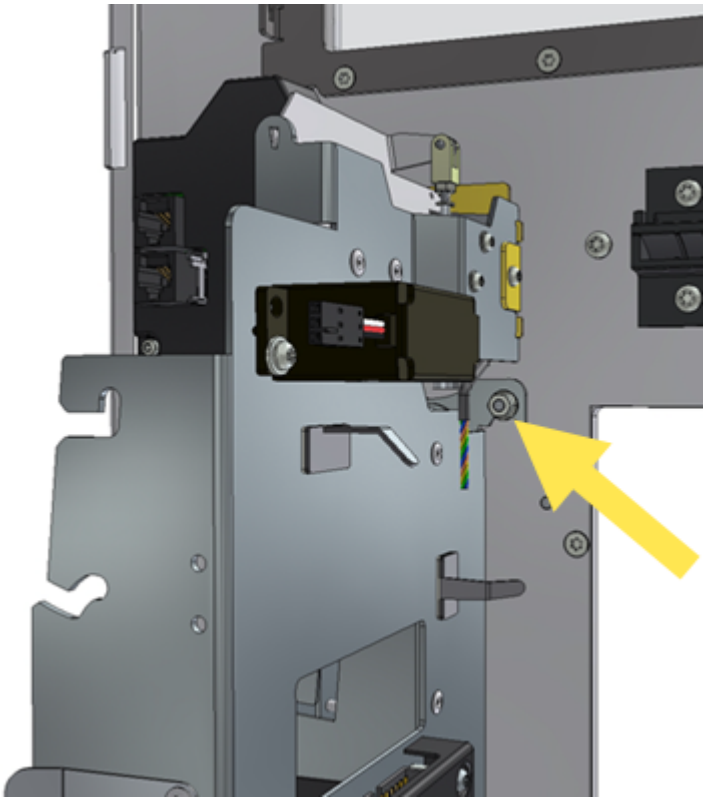

Install in reverse order. Keep the assembly pressed down while tightening the screws.

8.5 Coin verifier replacement

Removal

1. Ensure that there is sufficient free length of the verifier cable. Loosen more of the cable from the cable clamp if necessary.
2. Keep the locking latch pulled out while you lower the coin verifier a bit and remove it.
3. Disconnect the cable at the back of the verifier.

Install in reverse order.

8.6 Card reader replacement

Replacing the card reader depends on the model installed.

Chip Card Reader

Chip card readers are often equipped with tamper switches on both the card reader and pin pad. Partly unscrewing the reader may already trigger the tamper switch making the reader useless. If this is the case, the reader must be sent back to the supplier to reset the switch.

Reference:
How to safely dismount and mount a reader is described in the reader's installation guide: e.g. 3C XENTEO ECO Mounting instructions CWT C with CPU board 0501-E0150

MagStripe readers

- Disconnect the cable
- Unscrew the reader
- Mount the new reader
- Connect the cable

8.7 Display module replacement

The display module is mounted on the door on four hooks, two on each side of the display. The mounting is the same for both the STN and the TFT display. The STN display comes with build in Status indicator.

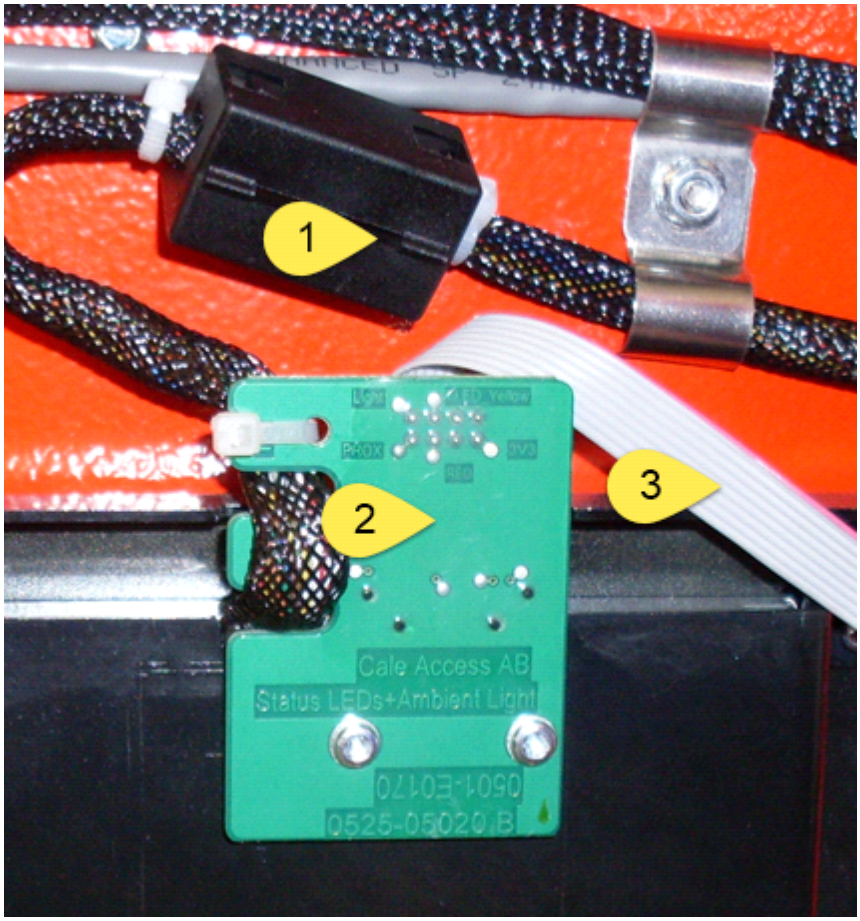

The TFT display unit sports a separate status indicator as depicted above:

1. Display Cable
2. Status indicator board
3. Status Indicator Cable

Note:
This board is mounted on the top of the display unit

8.7.1 Removal of the display Unit

Warning:
Always ensure that the external power supply to the terminal is disconnected or switched OFF before carrying out any work.

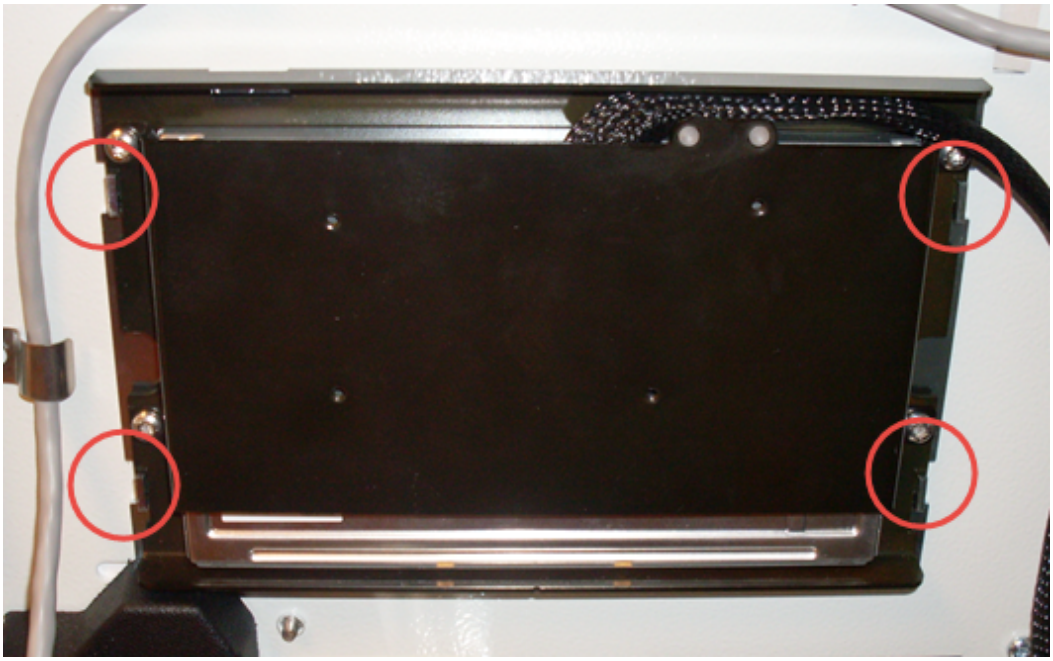

Figure 56, Removing the display module

The display module is removed by pulling it upwards to release it from the hooks and than lifting it away from the door panel

8.7.2 Assembly of the display unit

Replace the module by positioning it with the insertion slots over the hooks and press it downward firmly, locking the display in its place.

8.7.3 Connecting the display to the CPU board

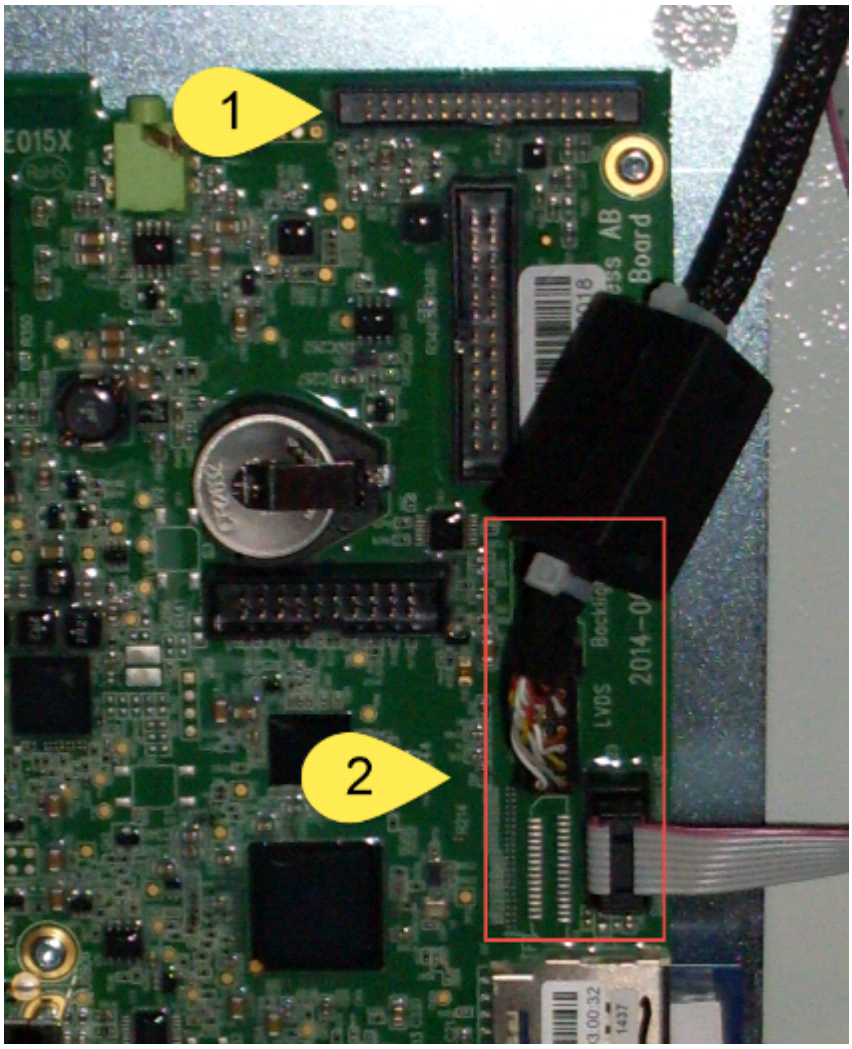

Figure 57, display connector locations. The TFT connectors are used

The display must be connected to the CPU board in different locations depending on the type of the display.

1. STN connector (J28)
2. TFT connectors (J41 Display, J23 Status Indicator)

8.8 Cabinet & pedestal

Cabinet and pedestal lacquer, touching up

Flowbird provides kits including touch-up paint (3 x 0.3 litres), sandpaper and instructions. When ordering, please state the article number and the colour number (usually a RAL number) indicated on labels inside the cabinet and pedestal.

8.8.1 Cabinet & pedestal door replacement

The door is fastened to the cabinet with an upper and a lower hinge pin. A spring helps pressing the pins into corresponding holes in the cabinet.

Note:
The procedure for the pedestal is the same as for the cabinet door replacement

Removal

Caution:
The weight of the door is approximately 15 kg.

1. Turn OFF the ticket terminal.
2. Disconnect all cables running between the door and the cabinet.
3. Ensure that the upper hinge pin's locking screw (2 mm Allen key) is tightened.
4. Hold the door with a steady grip.
5. Loosen the lower hinge pin's locking screw (2 mm Allen key) and push the screw with the attached hinge pin up and out of grip with the cabinet. Lock the hinge pin in this upper position.
6. Carefully pull the lower end of the door out and then lower the door to disengage the upper hinge pin from the cabinet.

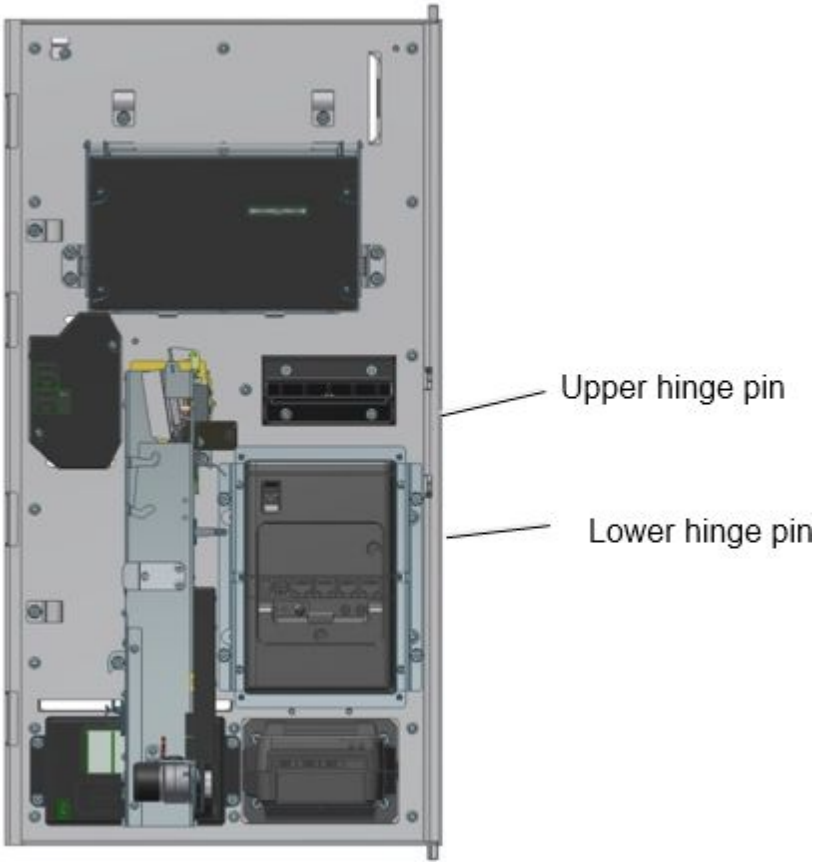

Figure 58, The door hinge mechanism is the same om all models

Assembly

Follow the directions above in reverse order.

Important:
Loosen the lower hinge pin's locking screw to let the hinge pin enter the corresponding hole in the cabinet.

8.8.2 E-lock replacement

Removal

1. Disconnect the cables from the E-lock.
2. Remove four nuts and remove the E-lock. A small box spanner (10 mm) is required to remove the lower E-lock due to limited space.

Assembly

Ensure that the dowel pin (see arrow) mates with the locking latches.

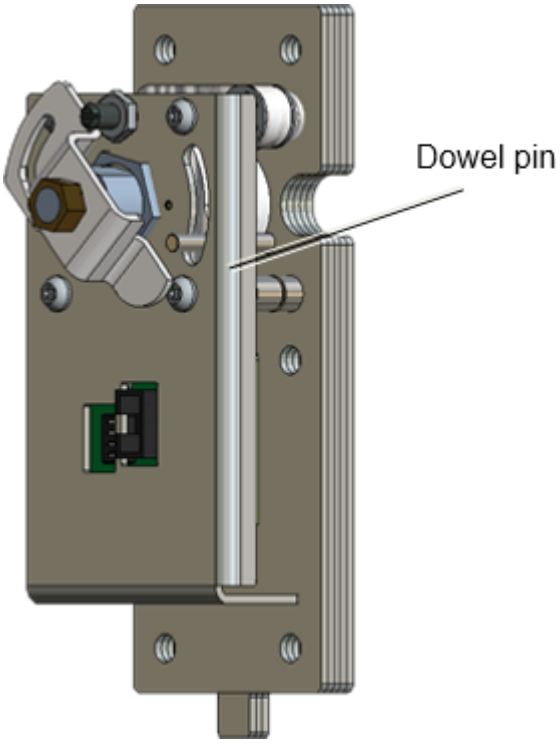

Figure 59, The dowel pin should mate with the locking latches

Check that the DIP switch setting corresponds to the E-lock position in the terminal.

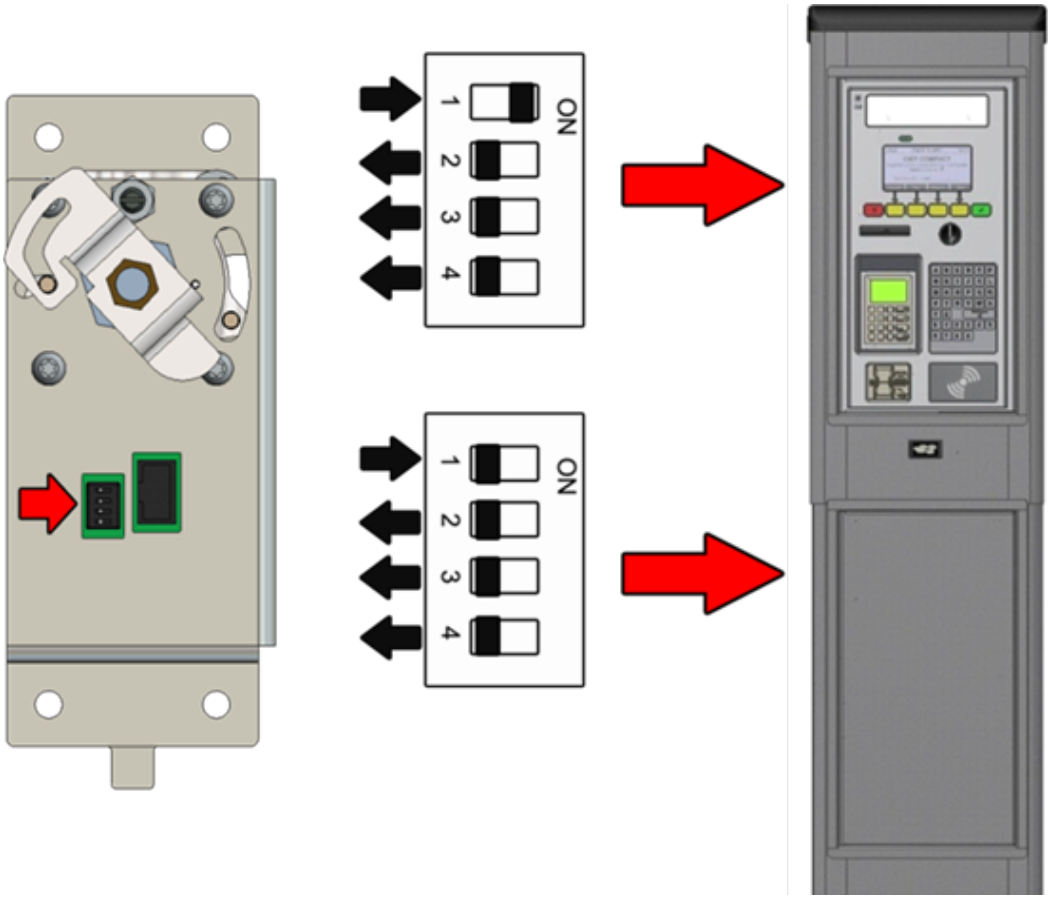

Figure 60, E-lock DIP switch settings

Start the terminal and close the cabinet door to get a printout showing the version of the E-lock AVR program. If necessary, update. See more about AVR updates in the CWT Software Configuration Manual.

9 Changing the CWT Compact software and firmware

See *CWT Software Configuration Handbook* on how to make changes in the application software files.

The whole CWT application, or parts of it, can be changed centrally via WebOffice or on site via the service menu.

In the latter case, changes can either be keyed in one at a time or the service menu can be used to transfer new application files from a temporary storage medium, a USB stick for instance, via the USB port on the CPU board.

Keyword index

- A -

About this Manual 7
Administrative tools 52
Approvals
- ADA 7
- Article 11 7
- CE 7
- DDA 7
- EN 12414 7
- EN 14450 7
- FCC part 15 7
- PCI Data Security Standard 7

- B -

Back-Up battery 11
Batteries
- Battery levels 72
- Battery on CPU board 72
- Disposal 11
- Lead accumulators 72

- C -

Cabinet
- Cleaning 81
- Lubrication 81

Cabinet & pedestal 94
- Door replacement 95
- E-lock replacement 96

Cabinet door display window 81
Card reader replacement
- Chip Card Reader 91
- MagStripe readers 91

Card readers 80
Caustic acid 12
Changing and emptying the coin box
- Emptying the coin box 70
- Inserting the coin box 70
- Removing the coin box 70

Changing the CWT Compact software and firmware 98
Changing the terminal's settings 70
Checking modem contact with network provider
- Blinking pattern 67
- LED Status indicator 67

Chip-card reader
- Cleaning 80
- Testing 80

Coin handling unit
- Cleaning 79
- Testing 79

Coin system 17
- Antipin module 17
- Coin box 25
- Coin handling board 24
- Coin verifier 20
- Escrow 22

Coin unit replacement 89
Coin verifier replacement 91
Connecting to the mains power grid 64
Corrective maintenance 82
CPU board lithium cell replacement
- Assembly 83
- Removal 83

CPU board version 0501-E0150 Rev H 53
CWT Compact interconnections 53

- D -

Daily operation 70
Data communication
- Cale WebOffice 2 28
- CWO 28
- Transaction processing 28

Display module 80
Display window replacement
- STN & TFT graphical Display module 91

Door locks
- Door-open sensors 49
- Electronic locks 46
- Mechanical locks 46

- E -

ESD protection
- Electro Static Discharge 14

- G -

GeBe GTP4672 Thermal printer
- Paper supply 40
- Printer mounting 37
- Printer shelf version 1 37
- Printer shelf version 2 37
- Sensors 36

GeBe Printer GTP4672 75
- Cleaning 78
- Print head 75
- Testing 79

General
- Cabinet 43
- Pedestal 43

Graphical STN & TFT displays
- Dynamic buttons 26
- keyboard 26

Graphical STN & TFT displays
Notification Area 26
Warning/error indicator 26

- H -

Heating system 50
Heavy lifting 14
High voltage 11
Hybrid card reader
Cleaning 80
Testing 80

- I -

Inside the pedestal 44
Coin Box 45
COIN BOX Vault 45
Installation 58
Installing a modem
Installing the external antenna 65
Installing the SIM card 65
Parts needed 65
Installing the battery 63
Installing the coin box 69
Installing the terminal 62
Introduction 7

- L -

LCD display
CWTC S3A 13
CWTC Touch 13
Lead battery replacement 83
Loading paper in a GeBe printer 67

- M -

Means of payment
Payment applications 15
Payment methods 15
Mechanical design 43
Mounting the cabinet on top of the pedestal 63
Mounting the pedestal in its foundation 62

- P -

Paper refill 71
Power supply 50
Battery charging by mains power 52
Battery charging by solar power 51
Power control 50
Preventive maintenance 71
Print system 28
Black mark location 41
GeBe GTP4672 Thermal printer 34
Paper low sensor area 40
Preprinting on printer media 40
Print side 40
Printer replacement 83
Product description 15
Product label 43
Program loading 69

- R -

References 8
Risk of explosion 13
Risk of tipping 14

- S -

Safety
Caution 10
Danger 10
Warning 10
Short-circuit risk 12
Site preparations 58
Minimal site dimensions 58
Mounting holes 58
Obstacles and shading 59
Placing the terminal on an existing concrete foundation 60
Pouring a new concrete foundation 60
Power supply 62
Solar power Positioning 59
Solar panel
cleaning 82
STN & TFT graphical Display module
Assebly of the display unit 93
Connecting the display to the CPU board 94
Removal of the display Unit 92
Structure of this book 8

- T -

Target audience 8
Terminal measurements 57
Terminology 9
The service menu 42